Circulating Fluid Temperature Controller

# Thermo-chiller Type inverter

(UL Standards)

RoHS

## Power consumption reduced by 53 %*1

### Outstanding energy saving effect with the triple inverter!

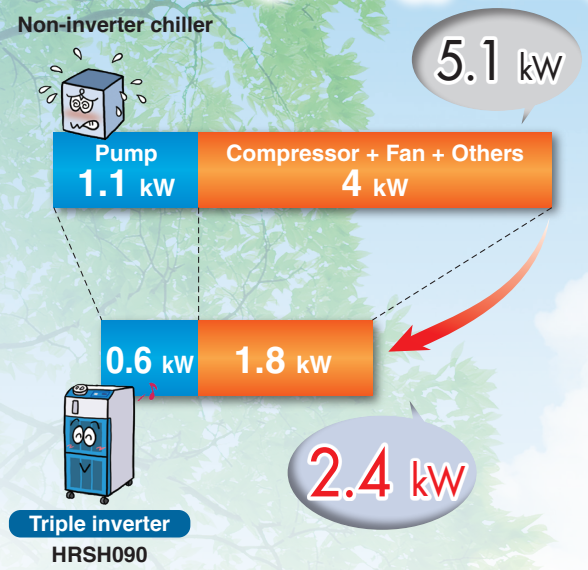


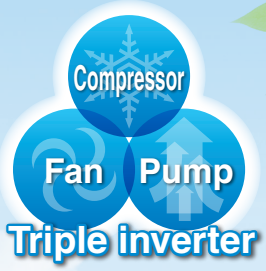


1. DC inverter compressor
2. DC inverter fan
3. Inverter pump

**Temperature stability ±0.1 °C** (when a load is stable)

**Set temperature range 5 °C to 35 °C***

* Except for HRSH090: 5 °C to 40 °C

**Max. ambient temperature 45 °C**

**Maintenance free pump***

Mechanical seal-less **immersion pump** is used.
No need to replace the seal → Maintenance hours reduced

* Except for HRSH090

**Cooling capacity**
9.5 kW, 10 kW, 15 kW, 20 kW, 25 kW, 28 kW

**Compact, Space-saving**

**Outdoor installation, Splashproof type** (IPX4)

* Except for HRSH090 - indoor use

**Low-noise design** Operating noise Max. 68 dB

* Except for HRSH300-A

**Compatible power supplies in Europe, Asia, Oceania, North, Central and South America**

- 3-phase 200 VAC (50 Hz), 3-phase 200 to 230 VAC (60 Hz)
- 3-phase 380 to 415 VAC (50/60 Hz)

## Series HRSH

SMC

*1 Under the conditions shown on page 1
*2 For water-cooled type, a water regulating valve is used for the facility water flow control instead of a fan.

CAT.EUS40-57Ddd-UK

# Series HRSH

## Triple inverter

**The inverter respectively controls the number of motor rotations of the compressor, fan and pump depending on the load from the user's equipment.**

**Power consumption** **reduced by 53 %*** compared with a non-inverter

*For HRSH090 thermo-chiller

With the inverter, it is possible to operate with the same performance even with the power supply of 50 Hz.

(The water-coled type is not equipped with a fan)

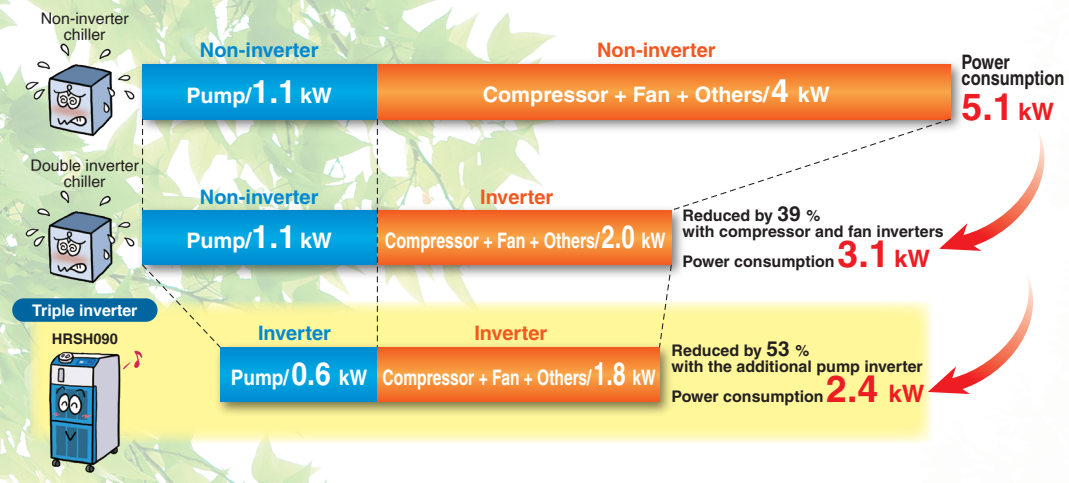


Operating ratio: Ratio of 9.5 kW (with heat load) to 0 kW (without heat load)  Operating ratio: 50 %, with heat load of 9.5 kW all the time

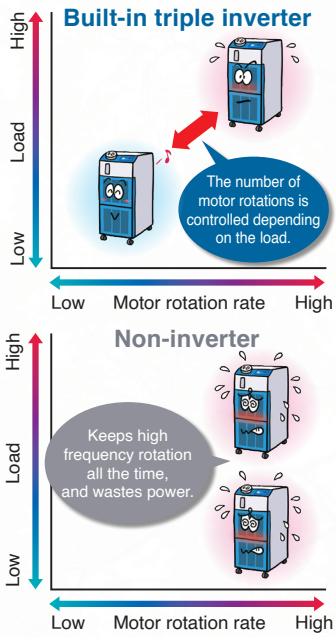


**Conditions**

Common conditions for non-inverter and triple inverter:
- Ambient temperature: 32 °C
- Circulating fluid temperature: 20 °C
- Circulating fluid flow rate: 35 L/min@0.3 MPa (60 Hz)
- Heat load: 9.5 kW

Conditions for non-inverter chiller: Continuous operation of the compressor which can cool down 9 . 5 kW at 60 Hz. The pump shall be same as that of the HRSH.

## Inverter pump

### Power reducing effect of the inverter pump

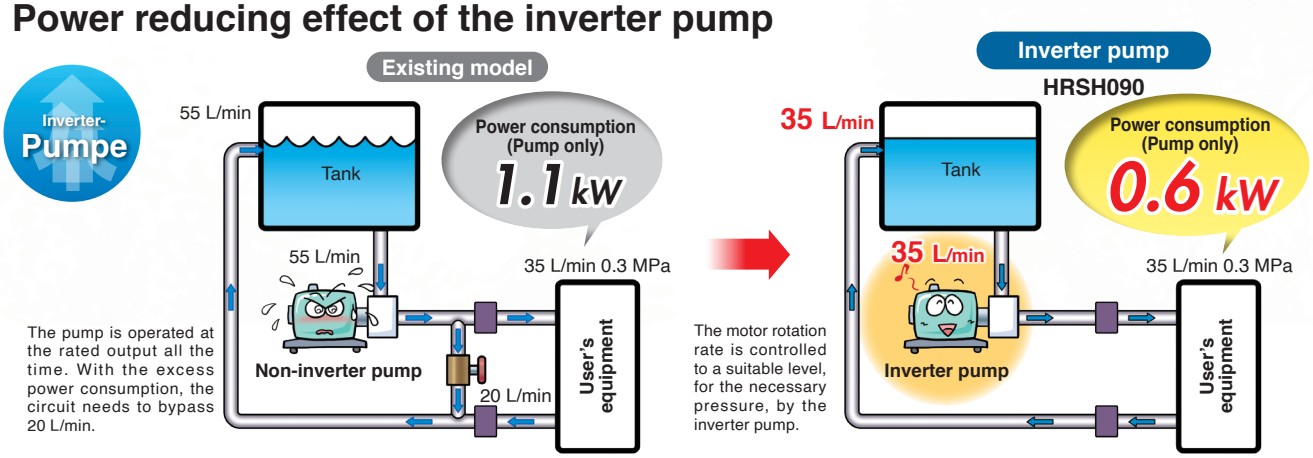


The pump is operated at the rated output all the time. With the excess power consumption, the circuit needs to bypass 20 L/min.

The motor rotation rate is controlled to a suitable level, for the necessary pressure, by the inverter pump.

### Circulating fluid pressure adjustable

Discharge pressure of the circulating fluid can be set with the operation panel. The inverter pump automatically controls the discharge pressure to the set pressure without adjusting the bypass piping under various piping conditions. Power consumption can be reduced by this control.
(Operation to the set pump operating frequency is also possible.)

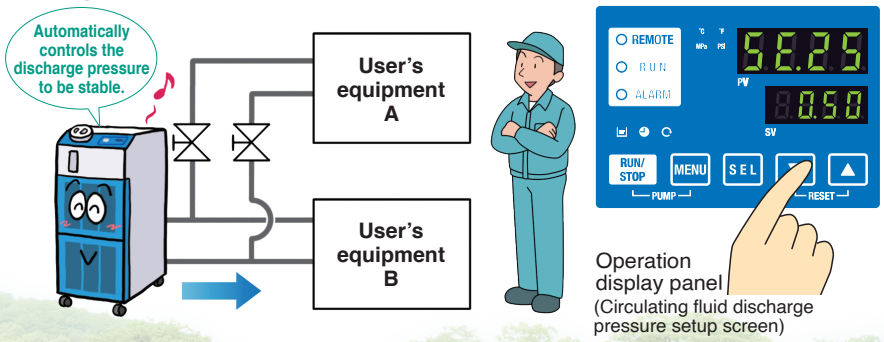


Operation display panel
(Circulating fluid discharge pressure setup screen)

When the product is used with the flow path switched for maintenance, the pressure adjusting function controls the discharge pressure to be stable. (Secure the specified minimum flow for each branch circuit.)

## Circuit diagram-HRSH Compact Type

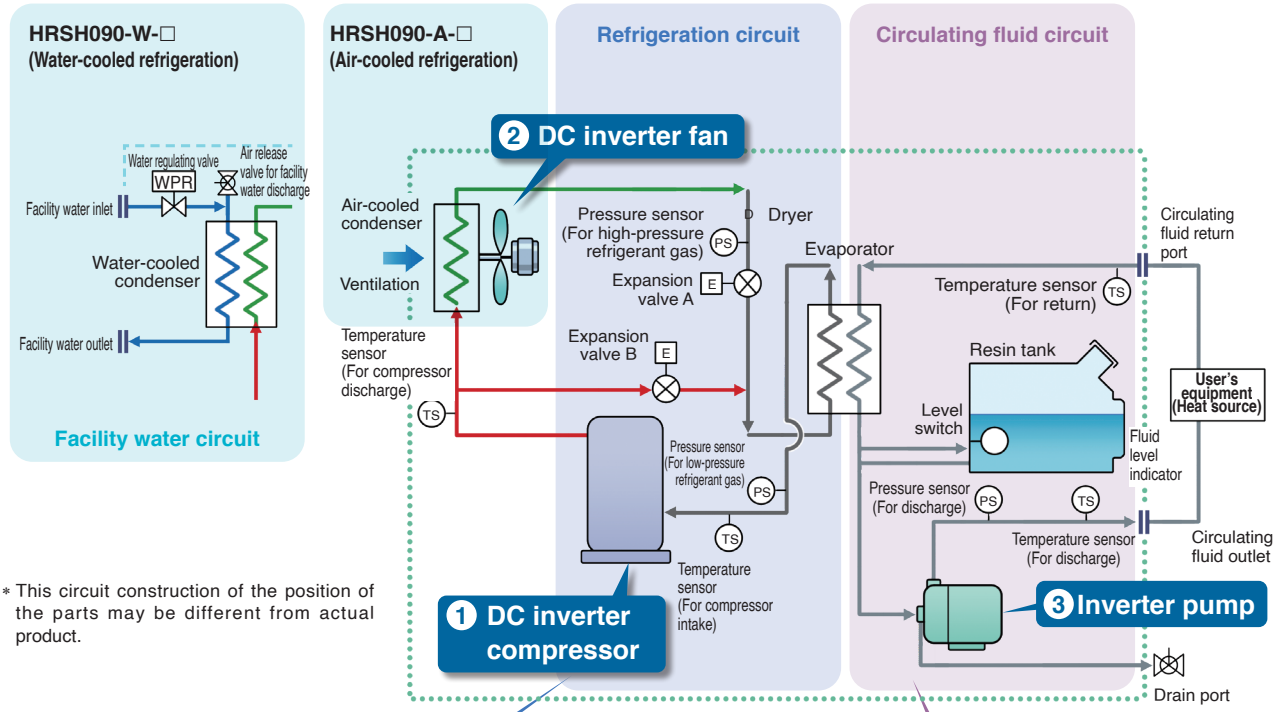


* This circuit construction of the position of the parts may be different from actual product.

## Refrigeration circuit

- The DC inverter compressor compresses the refrigerant gas, and discharges the high temperature and high pressure refrigerant gas.
- In the case of air-cooled refrigeration, the high temperature and high pressure refrigerant gas is cooled down by an air-cooled condenser with the ventilation of the DC inverter fan, and becomes a liquid. In the case of water-cooled refrigeration, the refrigerant gas is cooled by a water-cooled condenser with the facility water in the facility water circuit, and becomes a liquid.
- The liquefied high pressure refrigerant gas expands and its temperature lowers when it passes through expansion valve A and vaporises by taking heat from the circulating fluid in the evaporator.
- The vaporised refrigerant gas is sucked into the DC inverter compressor and compressed again.
- When heating the circulating fluid, the high pressure and high temperature refrigerant gas is bypassed into the evaporator by expansion valve B, to heat the circulating fluid.

**POINT**

**The combination of inverter control of the compressor and fan (facility water flow control by a water regulating valve is used in water-cooled refrigeration), and the precise control of expansion valves A and B realises energy saving operation without waste and high temperature stability.**

## Circulating fluid circuit

- The circulating fluid discharged from the inverter pump, is heated or cooled by the user's equipment and returns to the tank.
- The circulating fluid is sent to the evaporator by the inverter pump, and is controlled to a set temperature by the refrigeration circuit, to be discharged to the user's equipment side again by the thermo-chiller.

**POINT**

**Adjusting the discharge pressure by pump inverter control eliminates wasteful discharge of the circulating fluid and realises energy saving operation.**

**POINT**

**Since the refrigeration circuit is controlled by the signal from 2 temperature sensors (for return and discharge), precise temperature control of the circulating fluid can be performed. Therefore, there is no necessity of absorbing the temperature difference in the circulating fluid with a large tank capacity, and realises high temperature stability even with a small-size tank. Also, contributes to space-saving.**

## Circuit diagram-HRSH Large Type

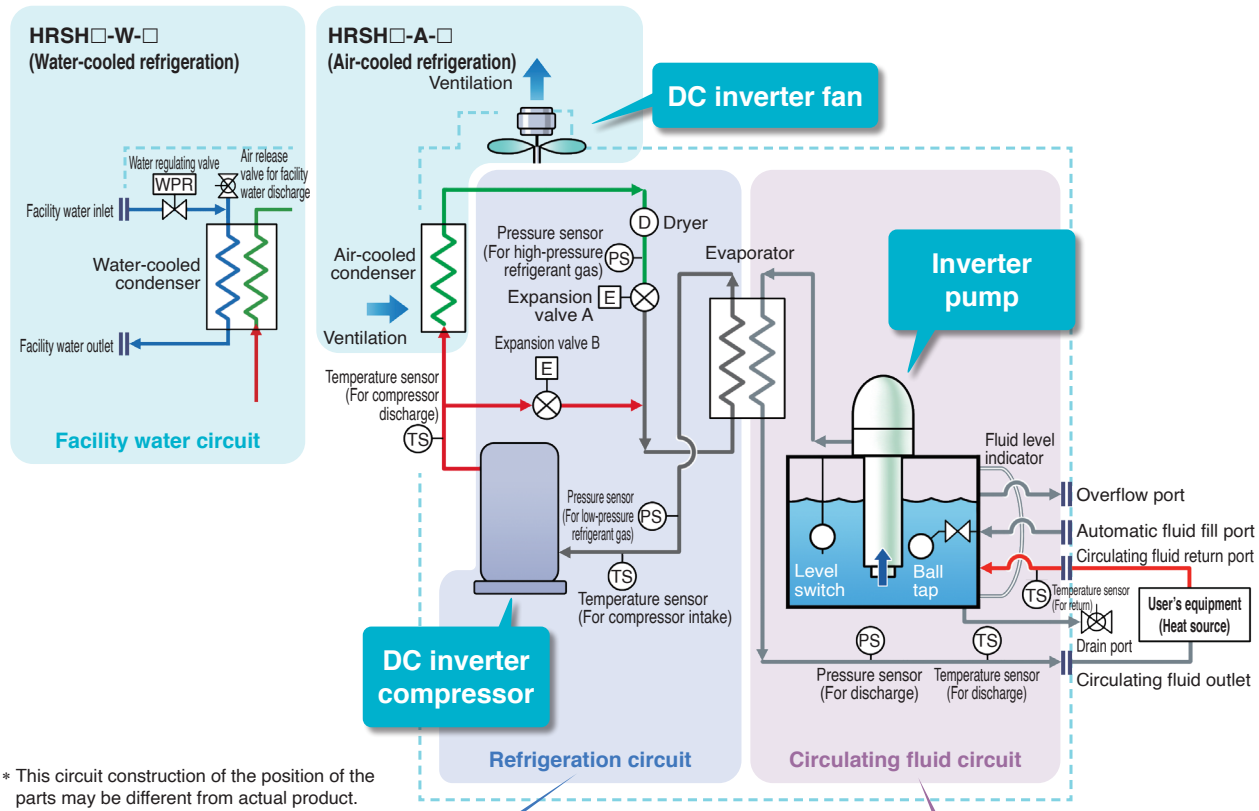


∗ This circuit construction of the position of the parts may be different from actual product.

## Refrigeration circuit

- The DC inverter compressor compresses the refrigerant gas, and discharges the high temperature and high pressure refrigerant gas.
- In the case of air-cooled refrigeration, the high temperature and high pressure refrigerant gas is cooled down by an air-cooled condenser with the ventilation of the DC inverter fan, and becomes a liquid. In the case of water-cooled refrigeration, the refrigerant gas is cooled by a water-cooled condenser with the facility water in the facility water circuit, and becomes a liquid.
- The liquefied high pressure refrigerant gas expands and its temperature lowers when it passes through expansion valve A and vaporises by taking heat from the circulating fluid in the evaporator.
- The vaporised refrigerant gas is sucked into the DC inverter compressor and compressed again.
- When heating the circulating fluid, the high pressure and high temperature refrigerant gas is bypassed into the evaporator by expansion valve B, to heat the circulating fluid.

**POINT**

**The combination of inverter control of the compressor and fan (facility water flow control by a water regulating valve is used in water-cooled refrigeration), and the precise control of expansion valves A and B realises energy saving operation without waste and high temperature stability.**

## Circulating fluid circuit

- The circulating fluid discharged from the inverter pump, is heated or cooled by the user's equipment and returns to the tank.
- The circulating fluid is sent to the evaporator by the inverter pump, and is controlled to a set temperature by the refrigeration circuit, to be discharged to the user's equipment side again by the thermo-chiller.

**POINT**

**Adjusting the discharge pressure by pump inverter control eliminates wasteful discharge of the circulating fluid and realises energy saving operation.**

**POINT**

**Since the refrigeration circuit is controlled by the signal from 2 temperature sensors (for return and discharge), precise temperature control of the circulating fluid can be performed. Therefore, there is no necessity of absorbing the temperature difference in the circulating fluid with a large tank capacity, and realises high temperature stability even with a small-size tank. Also, contributes to space-saving.**

# Variations

Cooling capacities ranging from 9.5 kW to 28 kW

(UL Standards)

| | Model | | Cooling method | Cooling capacity | Power supply | | Set temperature range | Temperature stability | Opcional accessories |
|---|---|---|---|---|---|---|---|---|---|
| | | | | | Option -20 | Option -40 | | | |
| Compact type | | HRSH090-A | Air-cooled refrigeration | 9.5 kw | 3-phase 200 VAC (50 Hz)<br>3-phase 200 to 230 VAC (60 Hz) | 3-phase 380 to 415 VAC (50/60 Hz)<br>3-phase 460 to 480 VAC (60 Hz) | 5 to 40 °C | ±0.1 °C | - Piping conversion fitting<br>- By-pass piping set<br>- Electric conductivity control set<br>- Particle filter set<br>- Filter for circulating fluid fill port<br>- Drain pan set (with water leakage sensor) |
| | | HRSH090-W | Water-cooled refrigeration | 11.0 kw | | | | | |
| Large type | | HRSH100-A | Air-cooled refrigeration | 10.5 kw | | Note)<br>3-phase 380 to 415 VAC (50/60Hz) | 5 to 35 °C | | - Piping conversion fitting<br>- By-pass piping set<br>- Electric conductivity control set<br>- Particle filter set<br>- Filter for circulating fluid fill port<br>- Snow protection hood |
| | | HRSH150-A | | 15.7 kw | | | | | |
| | | HRSH200-A | | 20.5 kw | | | | | |
| | | HRSH250-A | | 25 kw | | | | | |
| | | HRSH300-A | | 28 kw | | | | | |
| | | HRSH100-W | Water-cooled refrigeration | 11.5 kw | | | | | |
| | | HRSH150-W | | 15.7 kw | | | | | |
| | | HRSH200-W | | 20.6 kw | | | | | |
| | | HRSH250-W | | 24 kw | | | | | |

Note) Option -40 is UL compliant only for HRSH090.

# Temperature stability ±0.1 °C (when a load is stable)

By controlling the DC inverter compressor, DC inverter fan, and electronic expansion valve simultaneously, it maintains the good temperature stability when the heat load fluctuates.

# Circulating fluid can be heated without a heater.

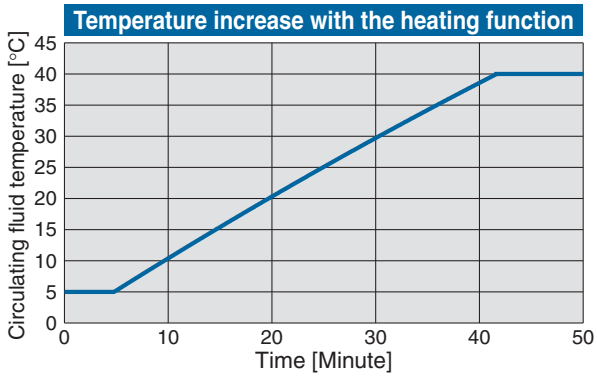


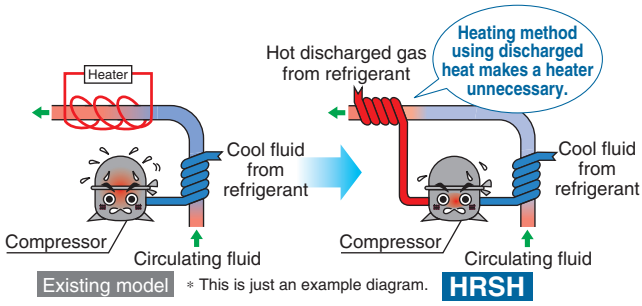


∗ This is just an example diagram.

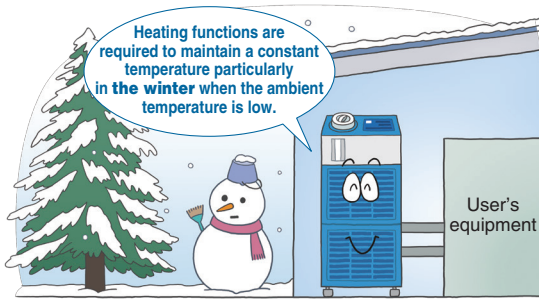


∗ **For HRSH090-A-20**

**Conditions**
- Ambient temperature: 5 °C
- Power supply: 200 V, 60 Hz
- Circulating fluid flow: 45 L/min@0.5 MPa
- External piping: By-pass piping

## Reduces the maintenance hours for the pump. (not for HRSH090)

### Mechanical seal-less immersion pump is used.

As the pump has no external leakage of the circulating fluid, a periodic check of the pump leakage and replacement of the mechanical seal are not necessary. There is no need to exhaust the circulating fluid when removing the pump.

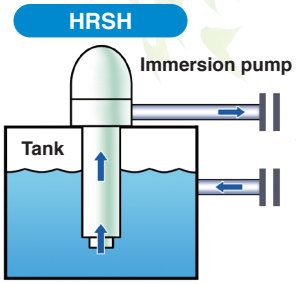


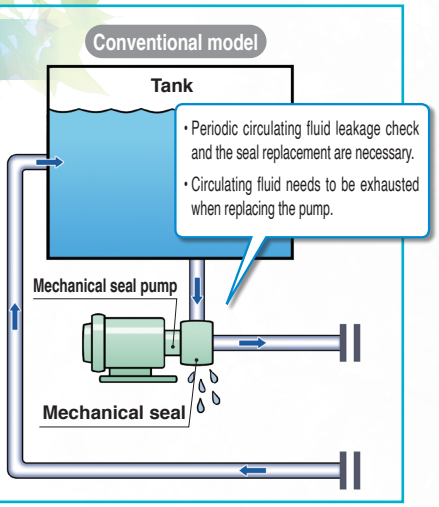


## Compact and lightweight 280 kg (For HRSH250-A-20-S)

### Compact tank 60 L (HRSH250-A)

Temperature followability control reduced the tank capacity required as a buffer.

### Aluminium air-cooled condenser

High heat transfer efficiency, lightweight

### The integrated tank and pump saves space. (not for HRSH090)

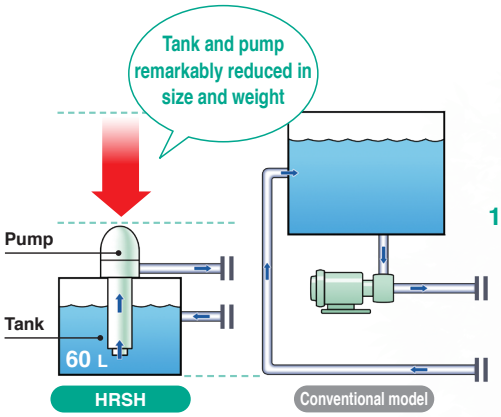

(HRSH250-A)

| | Model | Height [mm] | Width [mm] | Depth [mm] | Weight [kg] |
|---|---|---|---|---|---|
| Air-cooled refrigeration | HRSH090-A | 1080 | 377 | 970 | 130 |
| | HRSH100-A | 1420 | 954 | 715 | 180 |
| | HRSH150/200-A | 1420 | 954 | 715 | 215 |
| | HRSH250/300-A | 1720 | 1035 | 850 | 280 |
| Water-cooled refrigeration | HRSH090-W | 1080 | 377 | 970 | 121 |
| | HRSH100-W | 1235 | 687 | 715 | 150 |
| | HRSH150/200/250-W | 1235 | 687 | 715 | 180 |

## Power supply (24 V DC) available

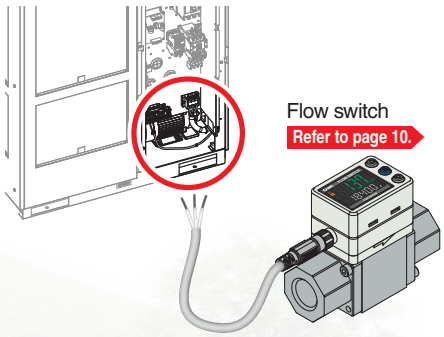


Power can be supplied from the terminal block of the thermo-chiller to external switches etc.

## IPX4

IP (International Protection) is the industrial standard for "Degrees of protection provided by outer defensive enclosures of electric equipment (IP Code)" according to IEC 60529 and JIS C 0920.

**IPX4: No harmful influence by water splash is acceptable from every direction.**

**Can be installed outdoors.**

*Not applicable for size HRSH090

## Globally compatible power supplies

(UL Standards)

(Europe, Asia, Oceania, Central and South America)

**Power supply** Applicable to 200 to 230 VAC, or 380 to 415 VAC

Transformers are unnecessary even when used overseas.

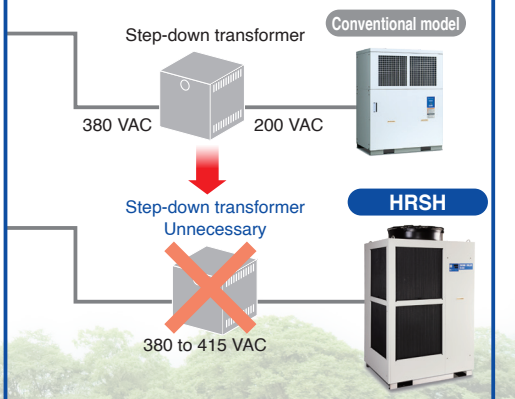

# Improved maintenance performance

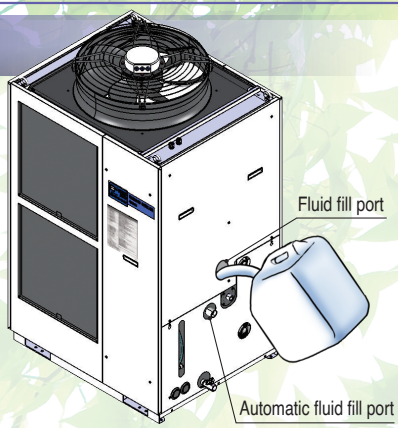


## Simple oparation with large digital display

**Easy operation by 3 steps:** ❶ RUN STOP Key (To Start) ❷ ▲ ▼ Keys (Adjust the temperature) ❸ RUN STOP Key (To Stop)

### Front side access
(Except for HRSH090)

**All the electrical components can be checked from the front side for an easier maintenance work.**

### Shaped for easy supply of circulating fluid (Only HRSH090)

**The angled supply port facilitates the supply of circulating fluid.**

### Fluid fill port for the circulating fluid is available.
(as an option for HRSH100/150/200/250)

**Fluid fill port is equipped in the upper part of the tank in addition to the automatic fluid fill port for a tap water piping connection.**

### Easy cleaning of the tank
(Only HRSH090)

**An opening with a cap is included separately from the water inlet. Opening diameter: Ø 110**

### Tool-less inspection and cleaning of air-cooled condenser

**Dustproof filter can be removed with no tools.**

### Easy check of the circulating fluid (Only HRSH090)

## Convenient Functions (Refer to the Operation Manual for details.)

**■ Timer operation function**
Timer for ON and OFF can be set in units of 0.5 h up to 99.5 h.
Ex.) Can set to stop on Saturday and Sunday and restart on Monday morning.

**Ex.** SE.02 "ON timer"

**Timer** The time remaining can be checked.

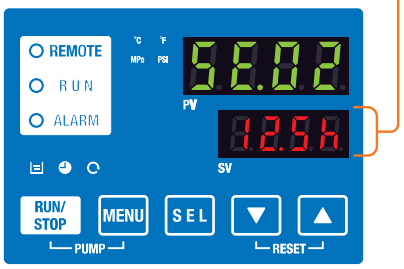


**■ Unit conversion function**
Temperature and pressure units can be changed.

**Orange indicator lights up.**

**■ Power failure auto-restart function**
Automatic restart from stoppage due to power failure etc. is possible without pressing the RUN/STOP key and remote operation.

**■ Anti-freezing operation function**
If the temperature approaches freezing point, e.g. in winter at night, the pump operates automatically and the heat generated by the pump warms the circulating fluid, preventing freezing.

**■ Key-lock function**
Can be set in advance to protect the set values from being changed by pressing keys by mistake.

**■ Function to output a signal for completion of preparation**
Notifies by communication when the temperature reaches the pre-set temperature range.

**■ Independent operation of the pump**
The pump can be operated independently while chiller is powered off. You can check piping leak and remove the air.

## Electric conductivity control set (Optional accessories)
(With DI filter + Solenoid valve kit for control)

**The electric conductivity of the circulating fluid can be set with the controller monitor arbitrarily.**

**Set control range: 5.0 to 45.0 μS/cm**

## With caster adjuster-foot
(Option)

# Selt Diagnosis and Check Display

**Display of 35 types of alarm codes** For details, refer to page 13.

Operation is monitored all the time by the integrated sensor.
Should any error occur, the self diagnosis result is displayed by the applicable alarm code from 35 types.
This makes it easier to identify the cause of the alarm.
Can be used before requesting service.

**Changeable alarm set values**

| Setting item | Set value |
|---|---|
| Circulating fluid discharge temperature rise | 5 to 55 °C |
| Circulating fluid discharge temperature drop | 1 to 39 °C |
| Circulating fluid discharge pressure rise | 0.05 to 0.6 MPa* |
| Circulating fluid discharge pressure drop | 0.05 to 0.6 MPa* |

* Set values vary depending on the model.

**Ex. AL01 "Low level in tank"**

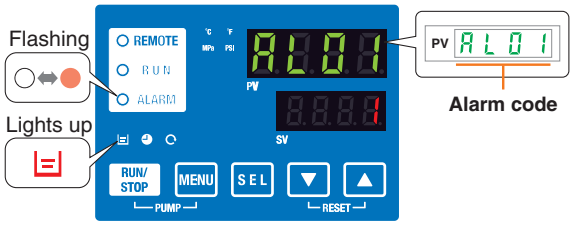


**Alarm codes notify of checking times.**
Notifies when to check the pump and fan motor. Helpful for facility maintenance.

* The fan motor is not used in water-cooled refrigeration.

**Ex. AL28 "Pump maintenance"**

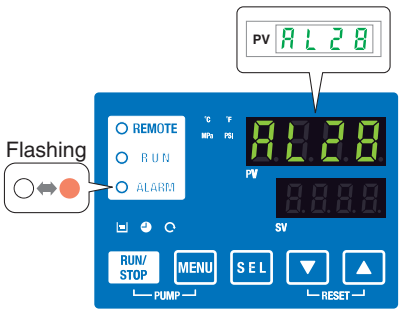


**Check display**
The internal temperature, pressure and operating time of the product are displayed.

**Ex. drv. "Accumulated operating time"**

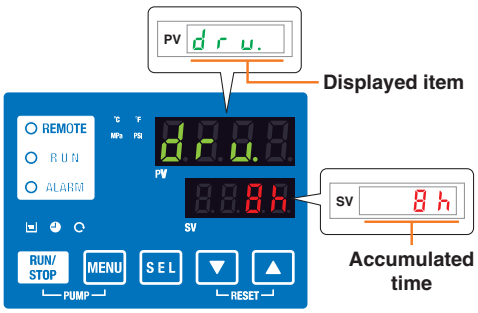


| Displayed item | |
|---|---|
| Temperature | Circulating fluid outlet temperature |
| | Circulating fluid return temperature |
| | Compressor gas temperature |
| Pressure | Circulating fluid outlet pressure |
| | Compressor gas discharge pressure |
| | Compressor gas return pressure |
| Operating time | Accumulated operating time |
| | Accumulated operating time of pump |
| | Accumulated operating time of fan |
| | Accumulated operating time of compressor |
| | Accumulated operation time of dustproof filter |
| Flow rate | Circulating fliud flow rate** |

* Displayed only for air-cooled refrigeration.
** Is not a meansurement value use it for reference.

**Convenient functions** Details ▶ Page 30 **Timer function, Anti-freezing function, Power failure auto-restart function, Warming-up function, Key-lock function**

# Communication function

**The serial communication (RS232C/RS485) and contact I/Os (2 inputs and 3 outputs) are equipped as standard. Communication with the user's equipment and system construction are possible, depending on the application. A 24 V DC output can be also provided, and is available for a flow switch (SMC's PF3W, etc.).**

### Ex.1 Remote signal I/O through serial communication

The remote operation is enabled (to start and stop) through serial communication.

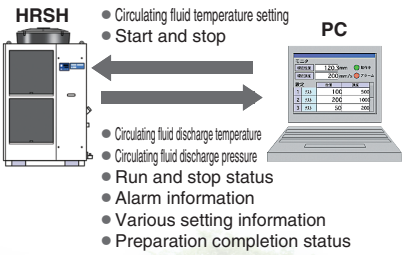


### Ex.2 Remote operation signal input

One of the contact inputs is used for remote operation and the other is used for a flow switch to monitor the flow, and their warning outputs are taken in.

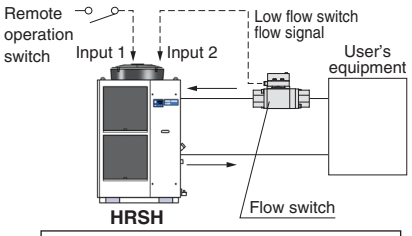


**Power for flow switch (24 V DC) can be supplied from the thermo-chiller.**

### Ex.3 Alarm and operation status (start, stop, etc.) signal output

The alarm and status generated in the product are assigned to 3 output signals based on their contents, and can be output.

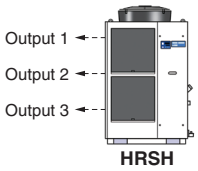


• **Output setting example**
Output 1: Temperature rise
Output 2: Pressure rise
Output 3: Operation status (start, stop, etc.)

# Applications

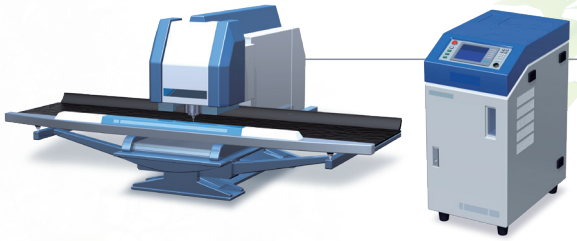

### Laser beam machine/Laser welding machine

Cooling of the laser oscillation part and power source

### Cleaning machine

Temperature control of cleaning solution

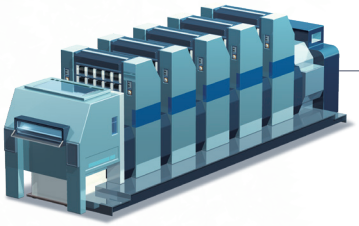

### Printing machine

Temperature control of the ink roller

### Injection molding

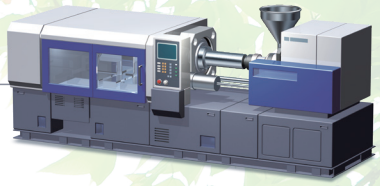

### Arc welding machine

Cooling of the power source

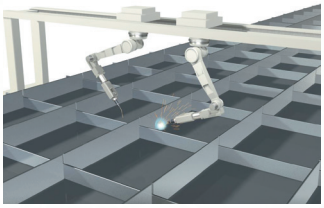

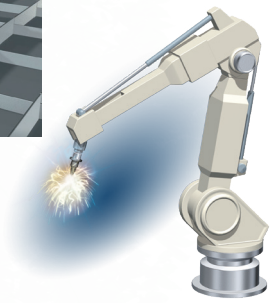

### Resistance welding machine (Spot welding)

Cooling of the welding head electrodes, transformers and transistors (thyristors)

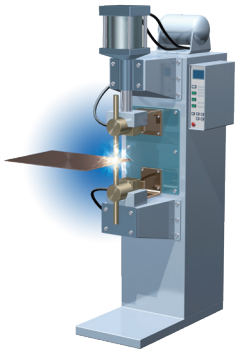

### High frequency induction heating equipment

Cooling of the heating coils, high frequency power source and around inverters

High frequency inverter

# Makes cooling water easily available, anytime, anywhere.

**When...** There is no cooling tower. Tap water is being used.

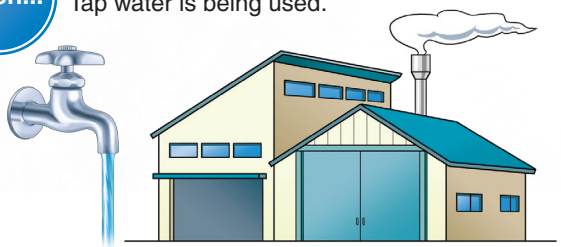

Even without a cooling tower, an air-cooled refrigerated chiller can be used to easily supply cooling water.

**When...** There is a cooling tower, but high temperatures in summer or low (freezing) temperatures in winter make cooling water temperatures unstable.

Cooling water at a consistent temperature can be supplied regardless of the season.

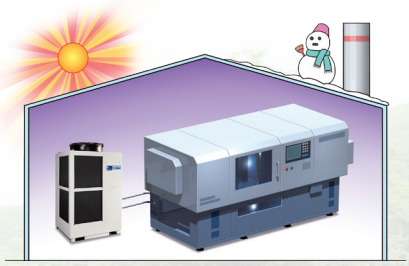

# Global Supply Network

## SMC has a comprehensive network in the global market.

We now have a presence of more than 4 0 0 branch offices and distributors in 7 8 countries world wide such as Asia, Oceania, North/Central/South America, and Europe. With this global network, we are able to provide a global supply of our substantial range of products with the best service.

# SMC Thermo-chiller Variations

Lots of variations are available in response to the users' requirements.

As of October 2016

| Series | Temperature stability [°C] | Set temperature range [°C] | Approximate cooling capacity [kW] | | | | | | | | | | | | Environment | Power supply |
|---|---|---|---|---|---|---|---|---|---|---|---|---|---|---|---|---|
| | | | 1.2 | 1.8 | 2.4 | 3 | 5 | 6 | 9 | 10 | 15 | 20 | 25 | 28 | | |
| HRSE Basic type | ±2.0 | 10 to 30 | ● | ● | ● | | | | | | | | | | Indoor use | Single-phase 230 VAC (50/60Hz) |
| HRS Standard type | ±0.1 | 5 to 40 | ● | ● | ● | ● | ● | ● | | | | | | | Indoor use | Single-phase 100 to 115 VAC (50/60Hz)* Single-phase 200 to 230 VAC (50/60Hz) |
| | ±0.5 | 5 to 35 | | | | | | | ● | | | | | | | |
| HRS100/150 Standard type | ±1.0 | 5 to 35 | | | | | | | | ● | ● | | | | Outdoor installation IPX4 | 3-phase 380 to 415 VAC (50/60Hz) |
| HRSH090 Inverter type | ±0.1 | 5 to 40 | | | | | | | ● | | | | | | Indoor use | 3-phase 200 VAC (50 Hz) 3-phase 200 to 230 VAC (60 Hz) 3-phase 380 to 415 VAC (50/60Hz) |
| HRSH Inverter type | ±0.1 | 5 to 35 | | | | | | | | ● | ● | ● | ● | ● | Outdoor installation IPX4 | 3-phase 200 VAC (50 Hz) 3-phase 200 to 230 VAC (60 Hz) 3-phase 380 to 415 VAC (50/60Hz) |

* Only available for lower cooling capacities.

## Circulating Fluid/Facility Water Line Equipment

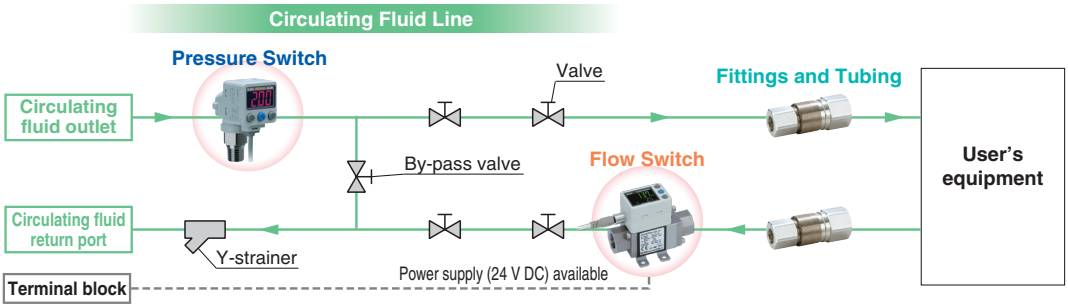


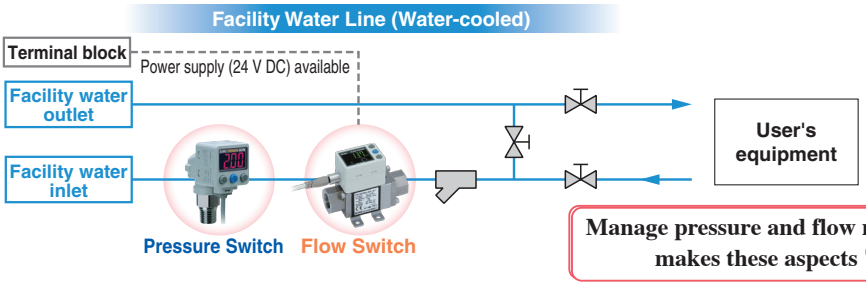


**Manage pressure and flow rate: digital display makes these aspects "visible"**

### Flow Switch: Monitors flow rate and temperature of the circulating fluid.

Refer to **the website www.smc.eu** for details.

**3-colour Display Digital Flow Switch for Water** ***PF3W***
**Integrated with temperature sensor**

PVC Piping

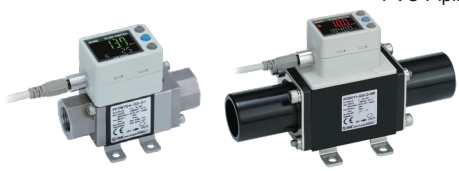

**3-colour Display**
**Electromagnetic Type Digital Flow Switch** ***LFE***

**Digital Flow Switch for**
**Deionized Water and Chemical Liquids** ***PF2D***
**4-Channel Flow Monitor** ***PF2□200***

### Pressure Switch: Monitors pressure of the circulating fluid.

Refer to **the website www.smc.eu** for details.

**2-colour Display**
**High-Precision Digital Pressure Switch** ***ISE80***

**Pressure Sensor for General Fluids**
***PSE56□, PSE57□***
**Pressure Sensor Controller**
***PSE200,300***

### Fittings and Tubing

Refer to **the website www.smc.eu** for details.

**S Coupler** ***KK***

**S Coupler/Stainless Steel**
**(Stainless Steel 304)** ***KKA***

**Metal One-touch Fittings** ***KQB2***

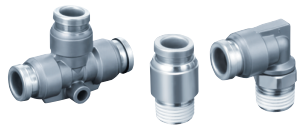

**Stainless Steel 316**
**One-touch Fittings** ***KQG2***

**Stainless Steel 316 Insert Fittings** ***KFG2***

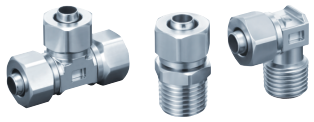

**Fluoropolymer Fittings** ***LQ***

**Tubing** ***T□***

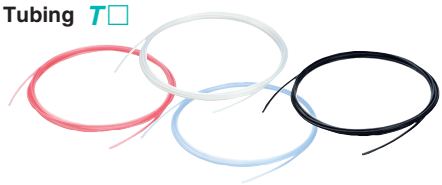

| Series | Material |
|---|---|
| T | Nylon |
| TU | Polyurethane |
| TH | FEP (Fluoropolymer) |
| TD | Modified PTFE (Soft fluoropolymer) |
| TL | Super PFA |
| TLM | PFA |

# CONTENTS

## Series HRSH

### Thermo-chiller *Series HRSH* Inverter Type Compact Type

How to Order/Specifications for **Air-cooled 200 V** ····· Page 13
How to Order/Specifications for **Water-cooled 200 V** ····· Page 14
How to Order/Specifications for **Air-cooled 400 V** ····· Page 15
How to Order/Specifications for **Water-cooled 400 V** ····· Page 16
Cooling Capacity ····· Page 17
Pump Capacity ····· Page 17
Dimensions for **Air-cooled 200/400 V** ····· Page 18
Dimensions for **Water-cooled 200/400 V** ····· Page 19
Recommended External Piping Flow ····· Page 20
Cable Specifications ····· Page 20

### Thermo-chiller *Series HRSH* Inverter Type Large Type

How to Order/Specifications for **Air-cooled 200 V** ····· Page 21
How to Order/Specifications for **Water-cooled 200 V** ····· Page 22
How to Order/Specifications for **Air-cooled 400 V** ····· Page 23
How to Order/Specifications for **Water-cooled 400 V** ····· Page 24
Cooling Capacity ····· Page 25
Pump Capacity ····· Page 26
Dimensions for **Air-cooled 200/400 V** ····· Page 27
Dimensions for **Water-cooled 200/400 V** ····· Page 28
Recommended External Piping Flow ····· Page 29
Cable Specifications ····· Page 29
Operation Display Panel ····· Page 30
List of Function ····· Page 30
Alarm ····· Page 30
Communication Function ····· Page 31

### Option

With Fluid Fill Port ····· Page 32
Caster Adjuster-foot Kit ····· Page 32
With automatic fluid fill function ····· Page 33
Applicable to deionised water piping ····· Page 33

### Optional Accessories

① Piping Conversion Fitting ····· Page 34
② By-pass Piping Set ····· Page 35
③ Caster Adjuster-Foot Kit ····· Page 36
④ Electric Conductivity Control Set ····· Page 36
⑤ Particle Filter Set ····· Page 37
⑥ Filter for Circulating Fluid Fill Port ····· Page 37
⑦ Snow Protection Hood ····· Page 38
⑧ Drain Pan Set (With Water Leakage Sensor) ····· Page 39

### Cooling Capacity Calculation

Required Cooling Capacity Calculation ····· Page 41
Precautions on Cooling Capacity Calculation ····· Page 42
Circulating Fluid Typical Physical Property Values ····· Page 42

Specific Product Precautions ····· Page 43

# Thermo-chiller Inverter Type Compact Type
# Air-cooled 200 V Type

## *Series HRSH090*

UK CA CE RoHS

MET c us (UL Standards)

## How to Order

**HRSH 090 – A □ – 20 – □ S**

**Cooling capacity**

| | |
|---|---|
| 090 | 9.5 kW |

**Cooling method**

| | |
|---|---|
| A | Air-cooled refrigeration |

**Pipe thread type**

| | |
|---|---|
| — | Rc |
| F | G (with Rc-G conversion fitting) |
| N | NPT (with Rc-NPT conversion fitting) |

**Power supply**

| | |
|---|---|
| 20 | 3-phase 200 VAC (50 Hz)<br>3-phase 200 to 230 VAC (60 Hz) |

**Option**

| | |
|---|---|
| — | None |
| M | Applicable to deionised water piping |
| J | Automatic water supply |

Note) When multiple options are combined, indicate symbols in alphabetical order.

**CE/UKCA/UL Compliant**

Note) Equipped with earth leakage breaker.

## Specifications

| Model | | | | HRSH090-A□-20-□S |
|---|---|---|---|---|
| Cooling method | | | | Air-cooled refrigeration |
| Refrigerant | | | | R410A (HFC) (GWP1975) |
| Control method | | | | PID control |
| Ambient temperature/humidity Note 1), 8) | | | [°C/%] | 5 to 45/30 to 70 % |
| Circulating fluid system | Circulating fluid Note 2) | | | Tap water, 15 % Ethylene glycol aqueous solution, Deionised water |
| | Set temperature range Note 1) | | [°C] | 5 to 40 |
| | Cooling capacity Note 3), 8) | | [kW] | 9.5 |
| | Heating capacity Note 4) | | [kW] | 2.5 |
| | Temperature stability Note 5) | | [°C] | ±0.1 |
| | Pump capacity | Rated flow (Outlet) | [l/min] | 45 (0.5 MPa) |
| | | Maximum flow rate | [l/min] | 60 |
| | | Maximum pump head | [m] | 50 |
| | Settable pressure range Note 6) | | [MPa] | 0.1 to 0.5 |
| | Minimum operating flow rate Note 7) | | [l/min] | 20 |
| | Tank capacity | | [L] | 18 |
| | Circulating fluid outlet, circulating fluid return port | | | Rc 1 (Symbol F: G 1, Symbol N: NPT 1) |
| | Tank drain port | | | Rc 1/4 (Symbol F: G 1/4, Symbol N: NPT 1/4) |
| | Fluid contact material | | | Stainless steel, Copper (Heat exchanger brazing), Brass, Bronze, Carbon, Ceramic, PE, PVC, POM, PTFE, NBR, EPDM, FKM, PP |
| Electrical system | Power supply | | | 3-phase 200 VAC (50 Hz), 3-phase 200 to 230 VAC (60 Hz)<br>Allowable voltage range ±10 %<br>(No continuous voltage fluctuation) |
| | Applicable earth leakage breaker | Rated current | [A] | 30 |
| | | Sensitivity of leak current | [mA] | 30 |
| | Rated operating current Note 5) | | [A] | 15 |
| | Rated power consumption Note 5) | | [kW (kVA)] | 4.6 (5.2) |
| Noise level (Front 1 m/Height 1 m) Note 5) | | | [dB (A)] | 66 |
| Accessories | | | | Alarm code list stickers 2 pcs. (English 1 pc./Japanese 1 pc.),<br>Operation Manual (for installation/operation) 2 pcs. (English 1 pc./Japanese 1 pc.),<br>Y-strainer (40 meshes) 25A, Barrel nipple 25A, Anchor bolt fixing brackets 2 pcs. (including 4 M10 bolts) Note 10) |
| Weight (dry state) | | | kg | Approx. 130 |

Note 1) Use a 15 % ethylene glycol aqueous solution if operating in a place where the ambient temperature and/or circulating fluid temperature is 10 °C or less.
Note 2) Use fluid in condition below as the circulating fluid.
Tap water: Standard of The Japan Refrigeration And Air Conditioning Industry Association (JRA GL-02-1994)
15 % ethylene glycol aqueous solution: diluted by tap water in condition above without any additives such as antiseptics.
Deionised water: Electric conductivity 1 μS/cm or higher (Electric resistivity 1 MΩ·cm or lower)
Note 3) ① Ambient temperature: 32 °C, ② Circulating fluid: Tap water, ③ Circulating fluid temperature: 20 °C, ④ Circulating fluid flow rate: Rated flow, ⑤ Power supply: 200/400 VAC
Note 4) ① Ambient temperature: 32 °C, ② Circulating fluid: Tap water, ③ Circulating fluid flow rate: Rated flow, ④ Power supply: 200/400 VAC
Note 5) ① Ambient temperature: 32 °C, ② Circulating fluid: Tap water, ③ Circulating fluid temperature: 20 °C, ④ Load: Same as the cooling capacity, ⑤ Circulating fluid flow rate: Rated flow, ⑥ Power supply: 200/400 VAC, ⑦ Piping length: Shortest
Note 6) With the pressure control mode by inverter. When the pressure control mode is not used, the pump power frequency set mode can be used.
Note 7) Fluid flow rate to maintain the cooling capacity. If the actual flow rate is lower than this, install a bypass piping.
Note 8) If the product is used at altitude of 1000 m or higher, refer to "Operating Environment/Storage Environment" (page 27) Item 14 "∗ For altitude of 1000 m or higher".
Note 9) The anchor bolt fixing brackets (including 4 M10 bolts) are used for fixing to wooden skids when packaging the thermo-chiller. No anchor bolt is included.

# Thermo-chiller Inverter Type Compact Type
# Water-cooled 200 V Type

## *Series HRSH090*

UK CA CE RoHS

MET c us (UL Standards)

## How to Order

**HRSH 090 – W □ – 20 – □ S**

**Cooling capacity**

| | |
|---|---|
| 090 | 11.0 kW |

**Cooling method**

| | |
|---|---|
| W | Water-cooled refrigeration |

**Pipe thread type**

| | |
|---|---|
| — | Rc |
| F | G (with Rc-G conversion fitting) |
| N | NPT (with Rc-NPT conversion fitting) |

**Power supply**

| | |
|---|---|
| 20 | 3-phase 200 VAC (50 Hz)<br>3-phase 200 to 230 VAC (60 Hz) |

**Option**

| | |
|---|---|
| — | None |
| M | Applicable to deionised water piping |
| J | Automatic water supply |

Note) When multiple options are combined, indicate symbols in alphabetical order.

**CE/UKCA/UL Compliant**

Note) Equipped with earth leakage breaker.

## Specifications

| Model | | | | HRSH090-W□-20-□S |
|---|---|---|---|---|
| Cooling method | | | | Water-cooled refrigeration |
| Refrigerant | | | | R410A (HFC) (GWP1975) |
| Control method | | | | PID control |
| Ambient temperature/humidity Note 1), 8) | | | [°C/%] | 5 to 45/30 to 70 % |
| Circulating fluid system | Circulating fluid Note 2) | | | Tap water, 15 % Ethylene glycol aqueous solution, Deionised water |
| | Set temperature range Note 1) | | [°C] | 5 to 40 |
| | Cooling capacity Note 3), 8) | | [kW] | 11.0 |
| | Heating capacity Note 4) | | [kW] | 2.5 |
| | Temperature stability Note 5) | | [°C] | ±0.1 |
| | Pump capacity | Rated flow (Outlet) | [l/min] | 45 (0.5 MPa) |
| | | Maximum flow rate | [l/min] | 60 |
| | | Maximum pump head | [m] | 50 |
| | Settable pressure range Note 6) | | [MPa] | 0.1 to 0.5 |
| | Minimum operating flow rate Note 7) | | [l/min] | 20 |
| | Tank capacity | | [L] | 18 |
| | Circulating fluid outlet, circulating fluid return port | | | Rc 1 (Symbol F: G 1, Symbol N: NPT 1) |
| | Tank drain port | | | Rc 1/4 (Symbol F: G 1/4, Symbol N: NPT 1/4) |
| | Fluid contact material | | | Stainless steel, Copper (Heat exchanger brazing), Brass, Bronze, Carbon, Ceramic, PE, PVC, POM, PTFE, NBR, EPDM, FKM, PP |
| Facility water system | Temperature range | | [°C] | 5 to 40 |
| | Pressure range | | [MPa] | 0.3 to 0.5 |
| | Required flow Note 10) | | [l/min] | 25 |
| | Facility water pressure differential | | [MPa] | 0.3 or more |
| | Facility water inlet/outlet | | | Rc 1/2 |
| | Fluid contact material | | | Stainless steel, Copper (Heat exchanger brazing), Bronze, Brass, PTFE, NBR, EPDM |
| Electrical system | Power supply | | | 3-phase 200 VAC (50 Hz), 3-phase 200 to 230 VAC (60 Hz)<br>Allowable voltage range ±10 %<br>(No continuous voltage fluctuation) |
| | Applicable earth leakage breaker | Rated current | [A] | 30 |
| | | Sensitivity of leak current | [mA] | 30 |
| | Rated operating current Note 5) | | [A] | 12 |
| | Rated power consumption Note 5) | | [kW (kVA)] | 3.8 (4.0) |
| Noise level (Front 1 m/Height 1 m) Note 5) | | | [dB (A)] | 65 |
| Accessories | | | | Alarm code list stickers 2 pcs. (English 1 pc./Japanese 1 pc.),<br>Operation Manual (for installation/operation) 2 pcs. (English 1 pc./Japanese 1 pc.),<br>Y-strainer (40 meshes) 25A, Barrel nipple 25A, Anchor bolt fixing brackets 2 pcs. (including 4 M10 bolts) Note 9) |
| Weight (dry state) | | | [kg] | Approx. 121 |

Note 1) Use a 15 % ethylene glycol aqueous solution if operating in a place where the ambient temperature and/or circulating fluid temperature is 10 °C or less.
Note 2) Use fluid in condition below as the circulating fluid.
Tap water: Standard of The Japan Refrigeration And Air Conditioning Industry Association (JRA GL-02-1994)
15 % ethylene glycol aqueous solution: diluted by tap water in condition above without any additives such as antiseptics.
Deionised water: Electric conductivity 1 μS/cm or higher (Electric resistivity 1 MΩ·cm or lower)
Note 3) ① Ambient temperature: 32 °C, ② Circulating fluid: Tap water, ③ Circulating fluid temperature: 20 °C, ④ Circulating fluid flow rate: Rated flow, ⑤ Power supply: 200/400 VAC
Note 4) ① Ambient temperature: 32 °C, ② Circulating fluid: Tap water, ③ Circulating fluid flow rate: Rated flow, ④ Power supply: 200/400 VAC
Note 5) ① Ambient temperature: 32 °C, ② Circulating fluid: Tap water, ③ Circulating fluid temperature: 20 °C, ④ Load: Same as the cooling capacity, ⑤ Circulating fluid flow rate: Rated flow, ⑥ Power supply: 200/400 VAC, ⑦ Piping length: Shortest
Note 6) With the pressure control mode by inverter. When the pressure control mode is not used, the pump power frequency set mode can be used.
Note 7) Fluid flow rate to maintain the cooling capacity. If the actual flow rate is lower than this, install a bypass piping.
Note 8) If the product is used at altitude of 1000 m or higher, refer to "Operating Environment/Storage Environment" (page 27) Item 14 "∗ For altitude of 1000 m or higher".
Note 9) The anchor bolt fixing brackets (including 4 M10 bolts) are used for fixing to wooden skids when packaging the thermo-chiller. No anchor bolt is included.
Note 10) The actual facility water flow rate will vary depending on the operating conditions.

# Thermo-chiller Inverter Type Compact Type
# Air-cooled 400 V Type
# Series HRSH

## How to Order

**HRSH 090 – A F – 40 – □**

**Cooling capacity**

| | |
|---|---|
| 090 | 9.5 kW |

**Cooling method**

| | |
|---|---|
| A | Air-cooled refrigeration |

**Pipe thread type**

| | |
|---|---|
| — | Rc |
| F | G (with Rc-G conversion fitting) |
| N | NPT (with Rc-NPT conversion fitting) |

**Power supply**

| | |
|---|---|
| 40 | 3-phase 380 to 415 VAC (50/60Hz), 3-phase 460 to 480 VAC (60Hz) |

**Option**

| | |
|---|---|
| — | None |
| M | Applicable to deionised water piping |
| J | Automatic water supply |

Note 1) When multiple options are combined, indicate symbols in alphabetical order.
Note 2) Equipped with an earth leakage breaker as standard.

## Specifications

| Model | | | | HRSH090-A□-40-□ |
|---|---|---|---|---|
| Cooling method | | | | Air-cooled refrigeration |
| Refrigerant | | | | R410A (HFC): GWP2088 |
| Control method | | | | PID control |
| Ambient temperature/humidity Note 1) | | | [°C/%] | 5 to 45/30 to 70 % |
| Circulating fluid system | Circulating fluid Note 2) | | | Tap water, 15 % Ethylene glycol aqueous solution, Deionised water |
| | Set temperature range Note 1) | | [°C] | 5 to 40 |
| | Cooling capacity Note 3) | | [kW] | 9.5 |
| | Heating capacity Note 4) | | [kW] | 2.5 |
| | Temperature stability Note 5) | | [°C] | ±0.1 |
| | Pump capacity | Rated flow (Outlet) | [l/min] | 45 (0.5 MPa) |
| | | Maximum flow rate | [l/min] | 60 |
| | | Maximum pump head | [m] | 50 |
| | Settable pressure range Note 6) | | [MPa] | 0.1 to 0.5 |
| | Minimum operating flow rate Note 7) | | [l/min] | 20 |
| | Tank capacity | | [L] | 18 |
| | Circulating fluid outlet, circulating fluid return port | | | Rc 1 (Symbol F: G 1, Symbol N: NPT 1) |
| | Tank drain port | | | Rc 1/4 (Symbol F: G 1/4, Symbol N: NPT 1/4) |
| | Fluid contact material | Metal | | Stainless steel, Copper (Heat exchanger brazing), Brass (Pump, Y-strainer), Carbon, SiC |
| | | Resin | | PE, PVC, POM, PTFE, NBR, EPDM, FKM |
| Electrical system | Power supply | | | 3-phase 380 to 415 VAC (50/60Hz), Allowable voltage range ±10 % , (No continuous voltage fluctuation)<br>3-phase 460 to 480 VAC (60Hz), Allowable voltage range +4 %, -10 % , (Max. voltage less than 500 v and continuous voltage fluctuation) |
| | Applicable earth leakage breaker Note 8) | Rated current | [A] | 20 |
| | | Sensitivity of leak current | [mA] | 30 |
| | Rated operating current Note 5) | | [A] | 8 |
| | Rated power consumption Note 5) | | [kW (kVA)] | 5.0 (5.6) |
| Noise level (Front 1 m/Height 1 m) Note 5) | | | [dB (A)] | 66 |
| Accessories | | | | Alarm code list stickers 2 pcs. (English 1 pc./Japanese 1 pc.),<br>Operation Manual (for installation/operation) 2 pcs. (English 1 pc./Japanese 1 pc.),<br>Y-strainer (40 meshes) 25A, Barrel nipple 25A, Anchor bolt fixing brackets 2 pcs. (including 4 M10 bolts) Note 8) |
| Weight (dry state) | | | [kg] | Approx. 130 |

Note 1) Use a 15 % ethylene glycol aqueous solution if operating in a place where the ambient temperature and/or circulating fluid temperature is 10 °C or less.
Note 2) Use fluid in condition below as the circulating fluid.
Tap water: Standard of The Japan Refrigeration And Air Conditioning Industry Association (JRA GL-02-1994)
15 % ethylene glycol aqueous solution: diluted by tap water in condition above without any additives such as antiseptics.
Deionised water: Electric conductivity 1 μS/cm or higher (Electric resistivity 1 MΩ·cm or lower)
Note 3) ① Ambient temperature: 32 °C, ② Circulating fluid: Tap water, ③ Circulating fluid temperature: 20 °C, ④ Circulating fluid flow rate: Rated flow, ⑤ Power supply: 200/400 VAC
Note 4) ① Ambient temperature: 32 °C, ② Circulating fluid: Tap water, ③ Circulating fluid flow rate: Rated flow, ④ Power supply: 200/400 VAC
Note 5) ① Ambient temperature: 32 °C, ② Circulating fluid: Tap water, ③ Circulating fluid temperature: 20 °C, ④ Load: Same as the cooling capacity, ⑤ Circulating fluid flow rate: Rated flow, ⑥ Power supply: 200/400 VAC, ⑦ Piping length: Shortest
Note 6) With the pressure control mode by inverter. When the pressure control mode is not used, the pump power frequency set mode can be used.
Note 7) Fluid flow rate to maintain the cooling capacity. If the actual flow rate is lower than this, install a by-pass piping.
Note 8) The anchor bolt fixing brackets (including 4 M10 bolts) are used for fixing to wooden skids when packaging the thermo-chiller. No anchor bolt is included.

# Thermo-chiller Inverter Type Compact Type
# Water-cooled 400 V Type
# Series HRSH

## How to Order

**HRSH 090 – W F – 40 – □**

**Cooling capacity**

| | |
|---|---|
| 090 | 11.0 kW |

**Cooling method**

| | |
|---|---|
| W | Water-cooled refrigeration |

**Pipe thread type**

| | |
|---|---|
| — | Rc |
| F | G (with Rc-G conversion fitting) |
| N | NPT (with Rc-NPT conversion fitting) |

**Power supply**

| | |
|---|---|
| 40 | 3-phase 380 to 415 VAC (50/60Hz),<br>3-phase 460 to 480 VAC (60Hz) |

**Option**

| | |
|---|---|
| — | None |
| M | Applicable to deionised water piping |
| J | Automatic water supply |

Note 1) When multiple options are combined, indicate symbols in alphabetical order.
Note 2) Equipped with an earth leakage breaker as standard.

## Specifications

| Model | | | | HRSH090-W□-40-□ |
|---|---|---|---|---|
| Cooling method | | | | Water-cooled refrigeration |
| Refrigerant | | | | R410A (HFC): GWP2088 |
| Control method | | | | PID control |
| Ambient temperature/Altitude Note 1), Note 8) | | | [°C] | Temperature: 5 to 45, Altitude: less than 3000 m |
| Circulating fluid system | Circulating fluid Note 2) | | | Tap water, 15 % Ethylene glycol aqueous solution |
| | Set temperature range Note 1) | | [°C] | 5 to 40 |
| | Cooling capacity Note 3), Note 8) | | [kW] | 11.0 |
| | Heating capacity Note 4) | | [kW] | 2.5 |
| | Temperature stability Note 5) | | [°C] | ±0.1 |
| | Pump capacity | Rated flow (Outlet) | [l/min] | 45 (0.5 MPa) |
| | | Maximum flow rate | [l/min] | 60 |
| | | Maximum pump head | [m] | 50 |
| | Settable pressure range Note 6) | | [MPa] | 0.1 to 0.5 |
| | Minimum operating flow rate Note 7) | | [l/min] | 20 |
| | Tank capacity | | [L] | 18 |
| | Circulating fluid outlet, circulating fluid return port | | | Rc 1 (Symbol F: G 1, Symbol N: NPT 1) |
| | Tank drain port | | | Rc 1/4 (Symbol F: G 1/4, Symbol N: NPT 1/4) |
| | Fluid contact material | | Metal | Stainless steel, Copper (Heat exchanger brazing), Brass (Y-strainer), Carbon, Ceramic |
| | | | Resin | PTFE, FKM, EPDM, PVC, NBR, POM, PE |
| Facility water system | Temperature range | | [°C] | 5 to 40 |
| | Pressure range | | [MPa] | 0.3 to 0.5 |
| | Required flow | | [l/min] | 25 |
| | Facility water pressure differential | | [MPa] | 0.3 or more |
| | Facility water inlet/outlet | | | Rc 1/2 (Symbol F: G 1/2, Symbol N: NPT 1/2) |
| | Fluid contact material | | Metal | Stainless steel, Copper (Heat exchanger brazing), Bronze, Brass |
| | | | Resin | PTFE, NBR, EPDM |
| Electrical system | Power supply | | | 3-phase 380 to 415 VAC (50/60Hz), Allowable voltage range ±10 % , (No continuous voltage fluctuation)<br>3-phase 460 to 480 VAC (60Hz), Allowable voltage range +4 %, -10 % , (Max. voltage less than 500 v and continuous voltage fluctuation) |
| | Applicable earth leakage breaker | Rated current | [A] | 20 |
| | | Sensitivity of leak current | [mA] | 30 |
| | Rated operating current Note 5) | | [A] | 6.8 |
| | Rated power consumption Note 5) | | [kW (kVA)] | 4.0 (4.7) |
| Noise level (Front 1 m/Height 1 m) Note 5) | | | [dB (A)] | 65 |
| Accessories | | | | Alarm code list stickers 2 pcs. (English 1 pc./Japanese 1 pc.),<br>Operation Manual (for installation/operation) 2 pcs. (English 1 pc./Japanese 1 pc.),<br>Y-strainer (40 meshes) 25A, Barrel nipple 25A |
| Weight (dry state) | | | [kg] | Approx. 121 |

Note 1) Use a 15 % ethylene glycol aqueous solution if operating in a place where the ambient temperature and/or circulating fluid temperature is 10 °C or less.
Note 2) Use fluid in condition below as the circulating fluid.
Tap water: Standard of The Japan Refrigeration And Air Conditioning Industry Association (JRA GL-02-1994)
15 % ethylene glycol aqueous solution: diluted by tap water in condition above without any additives such as antiseptics.
Deionised water: Electric conductivity 1 μS/cm or higher (Electric resistivity 1 MΩ·cm or lower)
Note 3) ① Facility water temperature: 32 °C, ② Circulating fluid: Tap water, ③ Circulating fluid temperature: 20 °C, ④ Circulating fluid flow rate: Rated flow, ⑤ Power supply: 400 VAC
Note 4) ① Facility water temperature: 32 °C, ② Circulating fluid: Tap water, ③ Circulating fluid flow rate: Rated flow, ④ Power supply: 400 VAC
Note 5) ① Facility water temperature: 32 °C, ② Circulating fluid: Tap water, ③ Circulating fluid temperature: 20 °C, ④ Load: Same as the cooling capacity, ⑤ Circulating fluid flow rate: Rated flow, ⑥ Power supply: 400 VAC, ⑦ Piping length: Shortest
Note 6) With the pressure control mode by inverter. When the pressure control mode is not used, the pump power frequency set mode can be used.
Note 7) Fluid flow rate to maintain the cooling capacity and the temperature stability. If the actual flow rate is lower than this, please install a by-pass piping.
Note 8) If the product is used at altitude of 1000 m or higher, refer to “Operating Environment/Storage Environment” (page 41) Item 14 “∗ For altitude of 1000 m or higher”.

## Cooling Capacity

∗ If the product is used at altitude of 1000 m or higher, refer to "Operating Environment/ Storage Environment" (page 41) Item 14 "∗ For altitude of 1000 m or higher."

### HRSH090-A□-20-□S

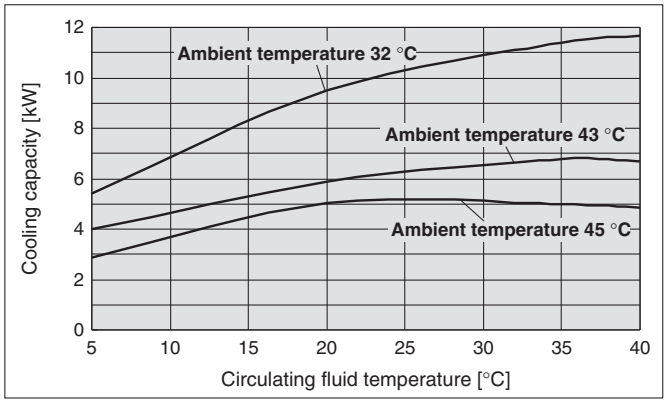


### HRSH090-A□-40-□

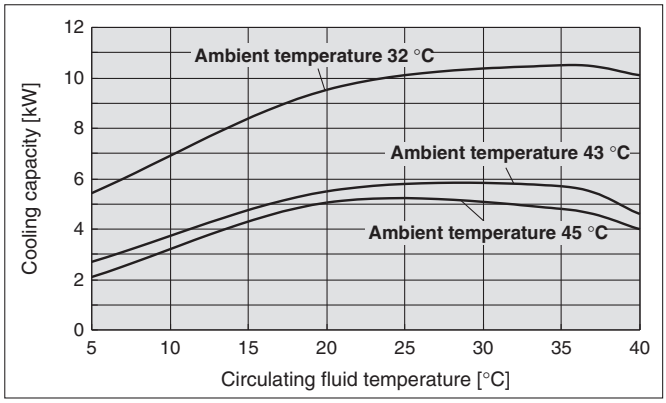


### HRSH090-W□-20-□S
### HRSH090-W□-40-□

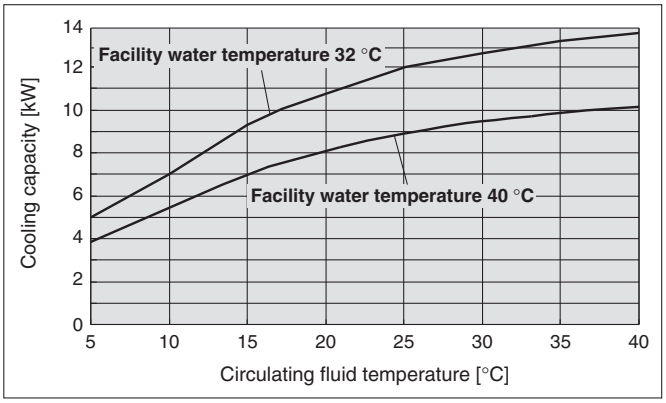


## Pump Capacity

### HRSH090-A□-20-□S/HRSH090-W□-20-□S
### HRSH090-A□-40-□/HRSH090-W□-40-□

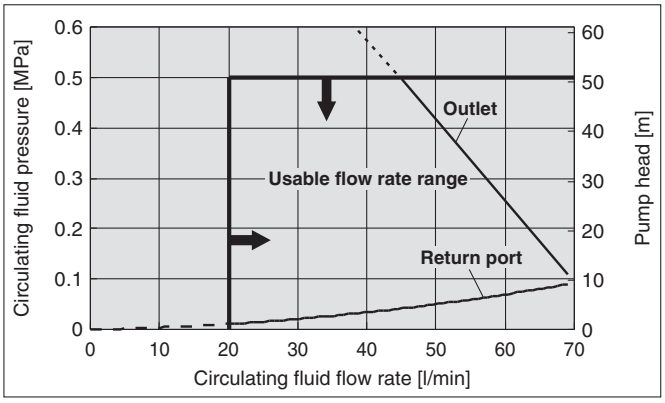

## Dimensions

### HRSH090-A-20-□S (Air-cooled 200 V type)
### HRSH090-A-40-□ (Air-cooled 400 V type)

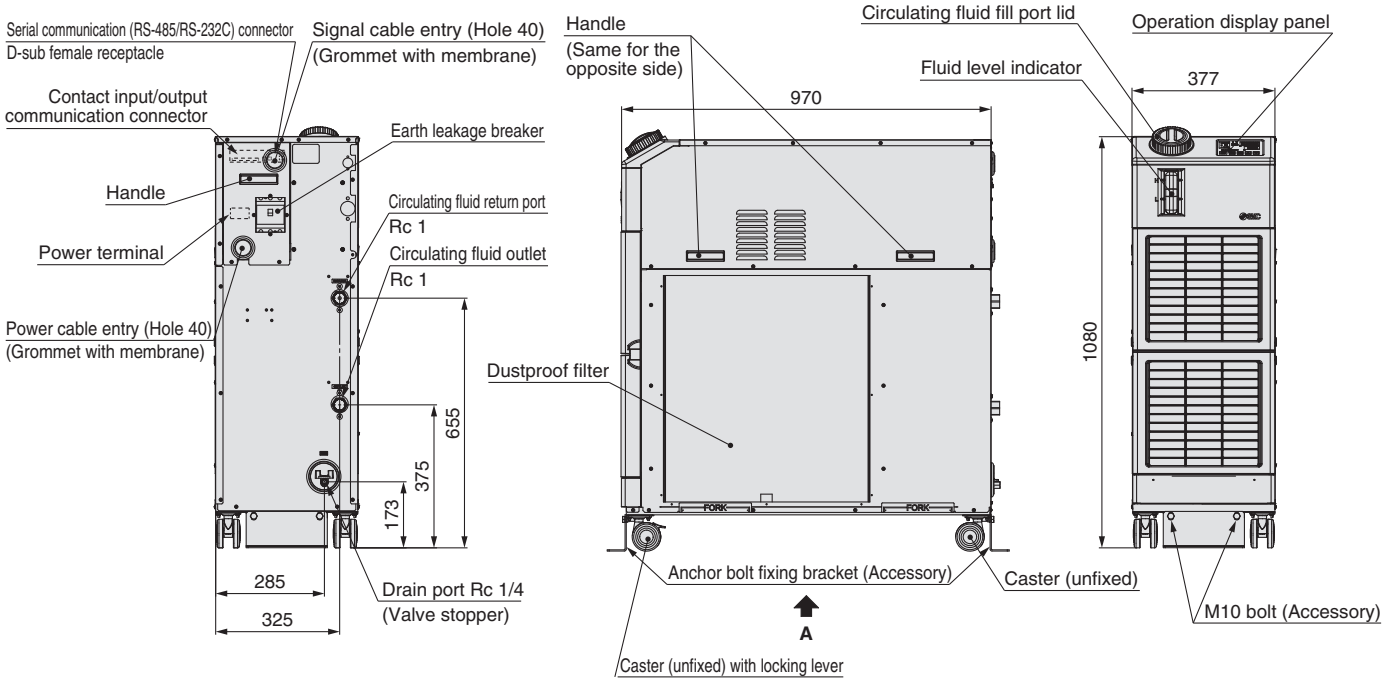


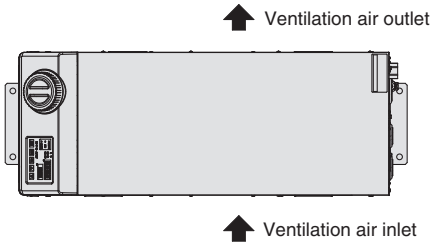


### Anchor bolt fixing position

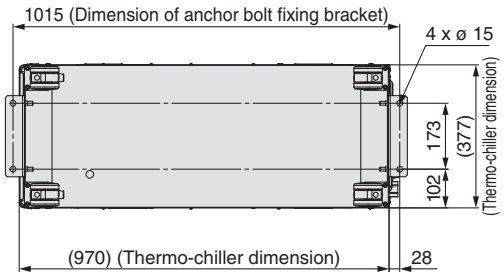


View A

### Y-strainer mounting view

∗ Mount it by yourself on the circulating fluid return port.

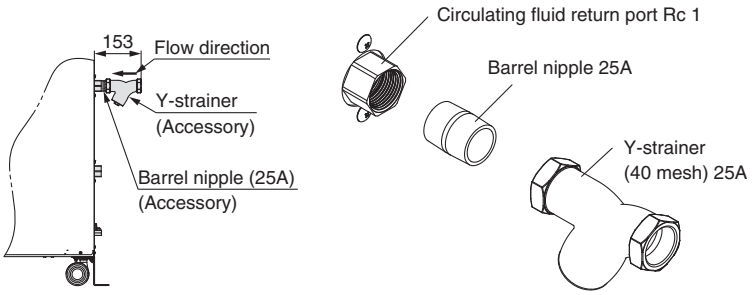

## Dimensions

### HRSH090-W-20-□S (Water-cooled 200 V type)
### HRSH090-W-40-□ (Water-cooled 400 V type)

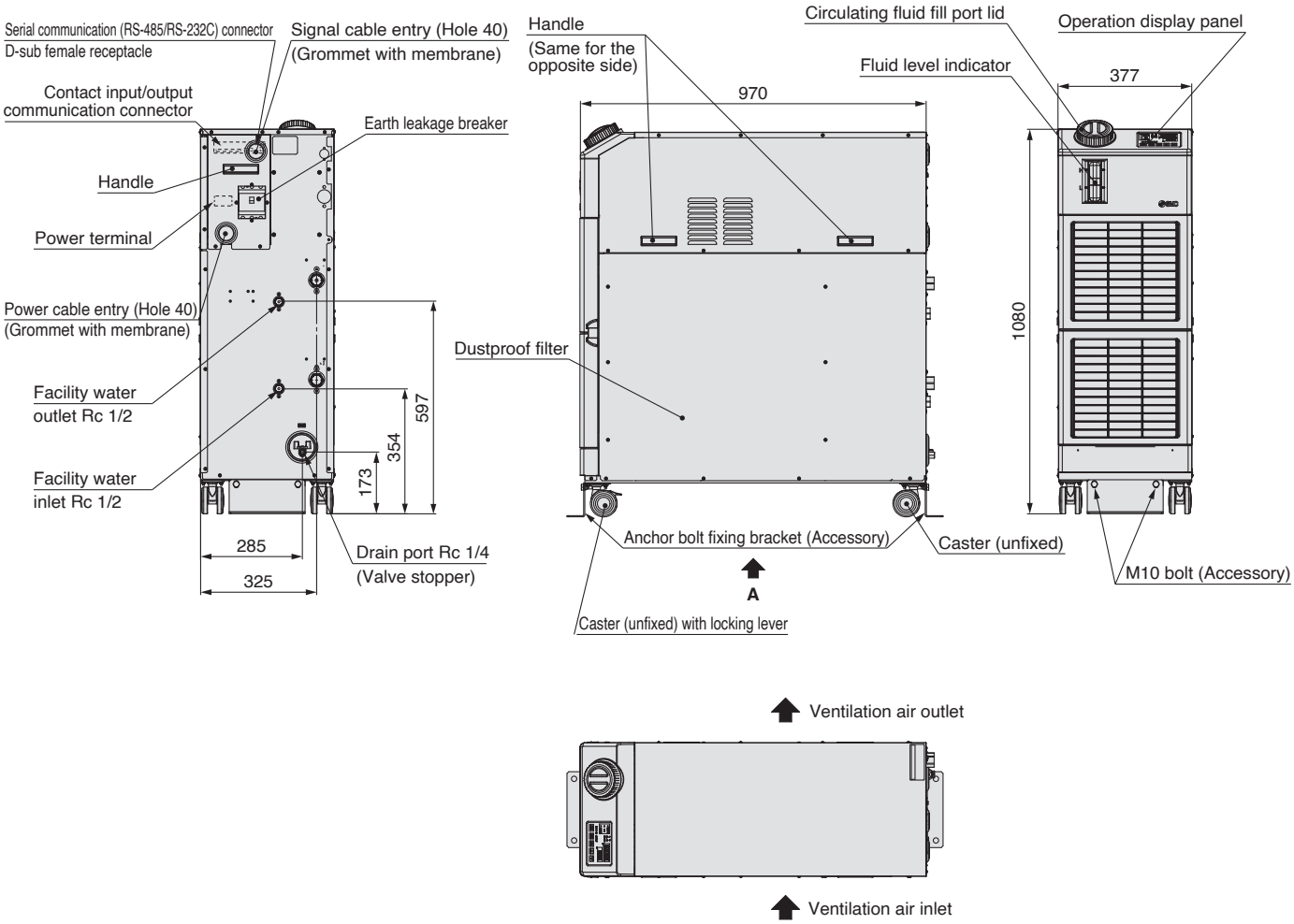


### Anchor bolt fixing position

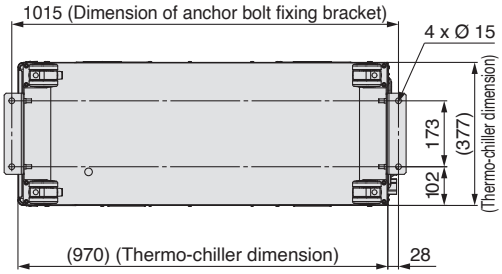


**View A**

### Y-strainer mounting view

∗ Mount it by yourself on the circulating fluid return port.

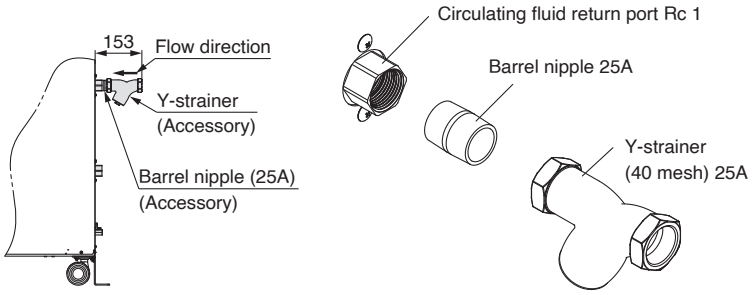

## Recommended External Piping Flow

External piping circuit is recommended as shown below.

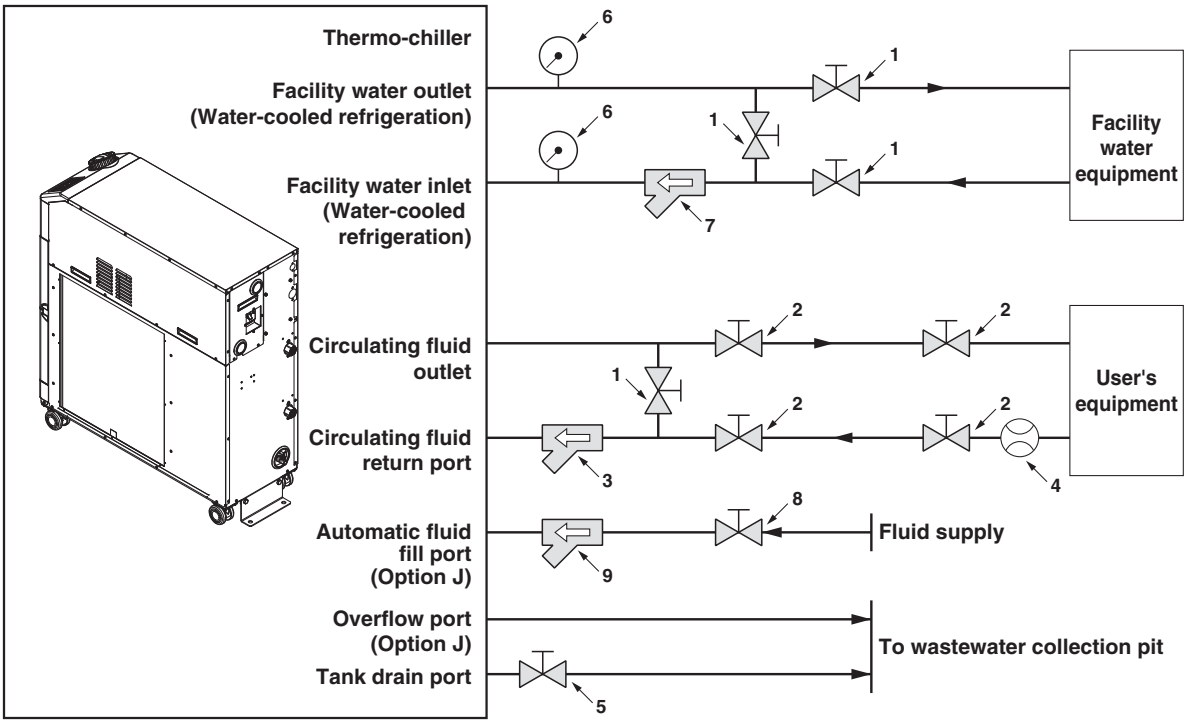


| No. | Description | Size |
|---|---|---|
| 1 | Valve | Rc 1/2 |
| 2 | Valve | Rc 1 |
| 3 | Y-strainer (#40) (Accessory) | Rc 1 |
| 4 | Flow meter | Refer to page 10 for flow switch. (PF3W711/511) |
| 5 | Valve (Part of thermo-chiller) | Rc 1/4 |
| 6 | Pressure gauge | 0 to 1 MPa |
| 7 | Y-strainer (#40) or filter | Rc 1/2 |
| 8 | Valve | Rc 3/8 |
| 9 | Y-strainer (#40) or filter | Rc 3/8 |

## Cable Specifications

Power supply and signal cable should be prepared by user.

### Power Cable Specifications

| Applicable model | Rated value for thermo-chiller | | | Power cable examples | |
|---|---|---|---|---|---|
| | Power supply | Applicable breaker rated current | Terminal block screw diameter | Cable size | Crimp terminal on the thermo-chiller side |
| **HRSH090-□□-20** | 3-phase 200 VAC (50 Hz)<br>3-phase 200 to 230 VAC (60 Hz) | 30 A | M5 | 4 cores x 55 mm$^2$<br>(4 cores x AWG90)<br>(including grounding cable) | R5.5-5 |
| **HRSH090-□□-40** | 3-phase 380 to 415 VAC (50/60Hz) | 20 A | M5 | 3 x 5.5 mm$^2$ (3 x AWG10)<br>(Power supply)<br>1 x 14 mm$^2$ (1 x AWG6)<br>(Grounding cable) | R5.5-5<br>(Power supply)<br>R14-5<br>(Grounding cable) |

Note) An example of the cable specifications is when two kinds of vinyl insulated wires with a continuous allowable operating temperature of 70 °C at 600 V, are used at an ambient temperature of 30 °C. Select the proper size of cable according to an actual condition.

### Signal Cable Specifications

| Terminal specifications | | Cable specifications |
|---|---|---|
| Terminal block screw diameter | Recommended crimp terminal | 0.75 mm$^2$ (AWG18)<br>Shielded cable |
| M3 | Y-shape crimp terminal<br>1.25Y-3 | |

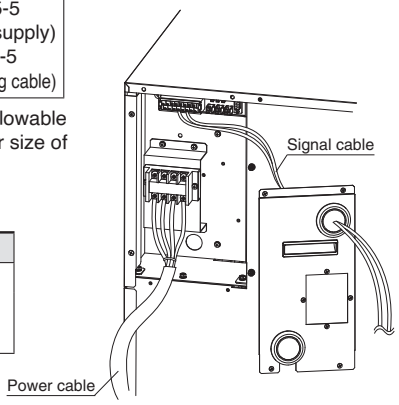

# Thermo-chiller Inverter Type Large Type
# Air-cooled 200 V Type
# Series HRSH

(UL Standards)

## How to Order

**HRSH 250 - A F - 20 - □ S**

**Cooling capacity**

| | |
|---|---|
| 100 | 10.5 kW |
| 150 | 15.7 kW |
| 200 | 20.5 kW |
| 250 | 25 kW |
| 300 | 28 kW |

**Cooling method**

| | |
|---|---|
| A | Air-cooled refrigeration |

**Pipe thread type**

| | |
|---|---|
| — | Rc |
| F | G (with Rc-G conversion fitting) |
| N | NPT (with Rc-NPT conversion fitting) |

**Power supply**

| | |
|---|---|
| 20 | 3-phase 200 VAC (50 Hz)<br>3-phase 200 to 230 VAC (60 Hz) |

**Option**

| | |
|---|---|
| — | None |
| A | With caster adjuster-foot kit |
| K Note) | With fluid fill port |

- When multiple options are combined, indicate symbols in alphabetical order.

Note) This is a manual fluid fill port that is different from the automatic fluid fill port. Fluid can be supplied manually into the tank without removing the side panel.
(Fluid can be supplied manually for the model without the symbol K if the side panel is removed.)

**CE/UKCA/UL Compliant**

Note) Equipped with earth leakage breaker with a breaker handle.

## Specifications

| Model | | | HRSH100-A□-20-□S | HRSH150-A□-20-□S | HRSH200-A□-20-□S | HRSH250-A□-20-□S | HRSH300-A□-20-□S |
|---|---|---|---|---|---|---|---|
| Cooling method | | | Air-cooled refrigeration | | | | |
| Refrigerant | | | R410A (HFC): GWP2088 | | | | |
| Control method | | | PID control | | | | |
| Ambient temperature/Altitude Note 1), Note 8) | | [°C] | Temperature: -20 to 45, Altitude: less than 3000 m | | | | |
| Circulating fluid system | Circulating fluid Note 2) | | Tap water, 15 to 40 % Ethylene glycol aqueous solution, Deionised water | | | | |
| | Set temperature range Note 1) | [°C] | 5 to 35 | | | | |
| | Cooling capacity Note 3), Note 8) | [kW] | 10.5 | 15.7 | 20.5 | 25 | 28 |
| | Heating capacity Note 4) | [kW] | 2.5 | 3 | 5.5 | 7.5 | |
| | Temperature stability Note 5) | [°C] | ±0.1 | | | | |
| | Pump capacity: Rated flow (Outlet) | [l/min] | 45 (0.43 MPa) | 45 (0.45 MPa) | | 125 (0.5 MPa) | |
| | Pump capacity: Maximum flow rate | [l/min] | 120 | 130 | | 180 | |
| | Pump capacity: Maximum pump head | [m] | 50 | | | 80 | |
| | Settable pressure range Note 6) | [MPa] | 0.1 to 0.5 | | | 0.1 to 0.8 | |
| | Minimum operating flow rate Note 7) | [l/min] | 20 | 25 | | 40 | |
| | Tank capacity | [L] | 25 | 42 | | 60 | |
| | Circulating fluid outlet, circulating fluid return port | | Rc 1 (Symbol F: G 1, Symbol N: NPT 1) | | | | |
| | Tank drain port | | Rc 3/4 (Symbol F: G 3/4, Symbol N: NPT 3/4) | | | | |
| | Automatic fluid fill system (Standard): Supply side pressure range | [MPa] | 0.2 to 0.5 | | | | |
| | Automatic fluid fill system (Standard): Supply side fluid temperature | [°C] | 5 to 35 | | | | |
| | Automatic fluid fill system (Standard): Automatic fluid fill port | | Rc 1/2 (Symbol F: G 1/2, Symbol N: NPT 1/2) | | | | |
| | Automatic fluid fill system (Standard): Overflow port | | Rc 1 (Symbol F: G 1, Symbol N: NPT 1) | | | | |
| | Fluid contact material | Metal | Stainless steel, Copper (Heat exchanger brazing), Brass (Y-strainer) | | | | |
| | | Resin | PTFE, PU, FKM, EPDM, PVC, NBR, POM, PE, NR | | | | |
| Electrical system | Power supply | | 3-phase 200 VAC (50 Hz), 3-phase 200 to 230 VAC (60 Hz)<br>Allowable voltage range ±10 % (No continuous voltage fluctuation) | | | | |
| | Rated operating current Note 5) | A | 14 | 17 | 25 | 34 | 36 |
| | Rated power consumption Note 5) | [kW (kVA)] | 4.5 (4.9) | 5.8 (6) | 8.4 (8.7) | 10.4 (11.6) | 11.1 (12.2) |
| Noise level (Front 1 m/Height 1 m) Note 5) | | [dB (A)] | 68 | | | | 71 |
| Waterproof specification | | | IPX4 | | | | |
| Accessories | | | Alarm code list stickers 2 pcs. (English 1 pc./Japanese 1 pc.),<br>Operation Manual (for installation/operation) 2 pcs. (English 1 pc./Japanese 1 pc.),<br>Y-strainer (40 meshes) 25A, Barrel nipple 25A, Anchor bolt fixing brackets 2 pcs. (including 6 M8 bolts) Note 9) | | | | |
| Weight (dry state) | | [kg] | Approx. 180 | Approx. 215 | | Approx. 280 | |

Note 1) Use a 15 % ethylene glycol aqueous solution if operating in a place where the ambient temperature is from -5 to 10 °C and/or circulating fluid temperature is 10 °C or less.
Use a 40 % ethylene glycol aqueous solution if operating in a place where the ambient temperature is from -20 to 5 °C.
Note 2) Use fluid in condition below as the circulating fluid.
Tap water: please refer to "Specific Product Precautions".
15 to 40 % ethylene glycol aqueous solution: diluted by tap water in condition above without any additives such as antiseptics.
Deionised water: Electric conductivity 1 μS/cm or higher (Electric resistivity 1 MΩ·cm or lower)
Note 3) ① Ambient temperature: 32 °C, ② Circulating fluid: Tap water, ③ Circulating fluid temperature: 20 °C, ④ Circulating fluid flow rate: Rated flow, ⑤ Power supply: 200 VAC
Note 4) ① Ambient temperature: 32 °C, ② Circulating fluid: Tap water, ③ Circulating fluid flow rate: Rated flow, ④ Power supply: 200 VAC
Note 5) ① Ambient temperature: 32 °C, ② Circulating fluid: Tap water, ③ Circulating fluid temperature: 20 °C, ④ Load: Same as the cooling capacity, ⑤ Circulating fluid flow rate: Rated flow, ⑥ Power supply: 200 VAC, ⑦ Piping length: Shortest
Note 6) With the pressure control mode by inverter. When the pressure control mode is not used, the pump power frequency set mode can be used.
Note 7) Fluid flow rate to maintain the cooling capacity and the temperature stability. If the actual flow rate is lower than this, please install a by-pass piping.
Note 8) If the product is used at altitude of 1000 m or higher, refer to "Operating Environment/Storage Environment" (page 41) Item 14 "∗ For altitude of 1000 m or higher".
Note 9) The anchor bolt fixing brackets (including 6 M8 bolts) are used for fixing to wooden skids when packaging the thermo-chiller. No anchor bolt is included.

# Thermo-chiller Inverter Type Large Type
## Water-cooled 200 V Type
# Series HRSH

(UL Standards)

## How to Order

**HRSH 250 – W F – 20 – □ S**

**Cooling capacity**

| | |
|---|---|
| 100 | 11.5 kW |
| 150 | 15.7 kW |
| 200 | 20.6 kW |
| 250 | 24 kW |

**Cooling method**

| | |
|---|---|
| W | Water-cooled refrigeration |

**Pipe thread type**

| | |
|---|---|
| — | Rc |
| F | G (with Rc-G conversion fitting) |
| N | NPT (with Rc-NPT conversion fitting) |

**Power supply**

| | |
|---|---|
| 20 | 3-phase 200 VAC (50 Hz)<br>3-phase 200 to 230 VAC (60 Hz) |

**Option**

| | |
|---|---|
| — | None |
| A | With caster adjuster-foot kit |
| K Note) | With fluid fill port |

• When multiple options are combined, indicate symbols in alphabetical order.

Note) This is a manual fluid fill port that is different from the automatic fluid fill port. Fluid can be supplied manually into the tank without removing the side panel.
(Fluid can be supplied manually for the model without the symbol K if the side panel is removed.)

**CE/UKCA/UL Compliant**

Note) Equipped with earth leakage breaker with a breaker handle.

## Specifications

| Model | | | HRSH100-W□-20-□S | HRSH150-W□-20-□S | HRSH200-W□-20-□S | HRSH250-W□-20-□S |
|---|---|---|---|---|---|---|
| Cooling method | | | Water-cooled refrigeration | | | |
| Refrigerant | | | R410A (HFC): GWP2088 | | | |
| Control method | | | PID control | | | |
| Ambient temperature/Altitude Note 1), Note 8) | | [°C] | Temperature: 2 to 45, Altitude: less than 3000 m | | | |
| Circulating fluid system | Circulating fluid Note 2) | | Tap water, 15 % Ethylene glycol aqueous solution, Deionised water | | | |
| | Set temperature range Note 1) | [°C] | 5 to 35 | | | |
| | Cooling capacity Note 3), Note 8) | [kW] | 11.5 | 15.7 | 20.6 | 24 |
| | Heating capacity Note 4) | [kW] | 2.5 | 3.5 | 4.0 | 7.2 |
| | Temperature stability Note 5) | [°C] | ±0.1 | | | |
| | Pump capacity: Rated flow (Outlet) | [l/min] | 45 (0.43 MPa) | 45 (0.45 MPa) | | |
| | Pump capacity: Maximum flow rate | [l/min] | 120 | 130 | | |
| | Pump capacity: Maximum pump head | [m] | 50 | | | |
| | Settable pressure range Note 6) | [MPa] | 0.1 to 0.5 | | | |
| | Minimum operating flow rate Note 7) | [l/min] | 25 | | | |
| | Tank capacity | [L] | 42 | | | |
| | Circulating fluid outlet, circulating fluid return port | | Rc 1 (Symbol F: G 1, Symbol N: NPT 1) | | | |
| | Tank drain port | | Rc 3/4 (Symbol F: G 3/4, Symbol N: NPT 3/4) | | | |
| | Automatic fluid fill system (Standard): Supply side pressure range | [MPa] | 0.2 to 0.5 | | | |
| | Automatic fluid fill system (Standard): Supply side fluid temperature | [°C] | 5 to 35 | | | |
| | Automatic fluid fill system (Standard): Automatic fluid fill port | | Rc 1/2 (Symbol F: G 1/2, Symbol N: NPT 1/2) | | | |
| | Automatic fluid fill system (Standard): Overflow port | | Rc 1 (Symbol F: G 1, Symbol N: NPT 1) | | | |
| | Fluid contact material | Metal | Stainless steel, Copper (Heat exchanger brazing), Brass (Y-strainer) | | | |
| | Fluid contact material | Resin | PTFE, PU, FKM, EPDM, PVC, NBR, POM, PE, NR | | | |
| Facility water system | Supply side pressure range | [MPa] | 0.3 to 0.5 | | | |
| | Supply side temperature range | [°C] | 5 to 40 | | | |
| | Required flow | [l/min] | 25 | 30 | 50 | 55 |
| | Facility water pressure differential | [MPa] | 0.3 or more | | | |
| | Facility water inlet/outlet | | Rc 1 (Symbol F: G 1, Symbol N: NPT 1) | | | |
| | Fluid contact material | Metal | Stainless steel, Copper (Heat exchanger brazing), Brass, Bronze | | | |
| | Fluid contact material | Resin | PTFE, EPDM, NBR | | | |
| Electrical system | Power supply | | 3-phase 200 VAC (50 Hz), 3-phase 200 to 230 VAC (60 Hz), Allowable voltage range ±10 % (No continuous voltage fluctuation) | | | |
| | Rated operating current Note 5) | [A] | 14 | 17 | 21 | 25 |
| | Rated power consumption Note 5) | [kW (kVA)] | 4.2 (4.7) | 5.3 (5.8) | 6.6 (7.0) | 8.0 (8.4) |
| Noise level (Front 1 m/Height 1 m) Note 5) | | [dB (A)] | 61 | 60 | | 61 |
| Waterproof specification | | | IPX4 | | | |
| Accessories | | | Alarm code list stickers 2 pcs. (English 1 pc./Japanese 1 pc.), Operation Manual (for installation/operation) 2 pcs. (English 1 pc./Japanese 1 pc.), Y-strainer (40 meshes) 25A, Barrel nipple 25A, Anchor bolt fixing brackets 2 pcs. (including 6 M8 bolts) Note 9) | | | |
| Weight (dry state) | | [kg] | Approx. 150 | Approx. 180 | | |

Note 1) Use a 15 % ethylene glycol aqueous solution if operating in a place where the ambient temperature and/or circulating fluid temperature is 10 °C or less.
Note 2) Use fluid in condition below as the circulating fluid.
Tap water: please refer to "Specific Product Precautions".
15 % ethylene glycol aqueous solution: diluted by tap water in condition above without any additives such as antiseptics. Deionised water: Electric conductivity 1 μS/cm or higher (Electric resistivity 1 MΩ·cm or lower)
Note 3) ① Facility water temperature: 32 °C, ② Circulating fluid: Tap water, ③ Circulating fluid temperature: 20 °C, ④ Circulating fluid flow rate: Rated flow, ⑤ Power supply: 200 VAC
Note 4) ① Facility water temperature: 32 °C, ② Circulating fluid: Tap water, ③ Circulating fluid flow rate: Rated flow, ④ Power supply: 200 VAC
Note 5) ① Facility water temperature: 32 °C, ② Circulating fluid: Tap water, ③ Circulating fluid temperature: 20 °C, ④ Load: Same as the cooling capacity, ⑤ Circulating fluid flow rate: Rated flow, ⑥ Power supply: 200 VAC, ⑦ Piping length: Shortest
Note 6) With the pressure control mode by inverter. When the pressure control mode is not used, the pump power frequency set mode can be used.
Note 7) Fluid flow rate to maintain the cooling capacity and the temperature stability. If the actual flow rate is lower than this, please install a by-pass piping.
Note 8) If the product is used at altitude of 1000 m or higher, refer to "Operating Environment/Storage Environment" (page 41) Item 14 "∗ For altitude of 1000 m or higher".
Note 9) The anchor bolt fixing brackets (including 6 M8 bolts) are used for fixing to wooden skids when packaging the thermo-chiller. No anchor bolt is included.

# Thermo-chiller Inverter Type Large Type
# Air-cooled 400 V Type
# Series HRSH

## How to Order

**HRSH 250 - A F - 40 - □**

**Cooling capacity**

| | |
|---|---|
| 100 | 10.5 kW |
| 150 | 15.7 kW |
| 200 | 20.5 kW |
| 250 | 25 kW |
| 300 | 28 kW |

**Cooling method**

| | |
|---|---|
| A | Air-cooled refrigeration |

**Pipe thread type**

| | |
|---|---|
| — | Rc |
| F | G (with Rc-G conversion fitting) |
| N | NPT (with Rc-NPT conversion fitting) |

**Power supply**

| | |
|---|---|
| 40 | 3-phase 380 to 415 VAC (50/60Hz) |

**Option**

| | |
|---|---|
| — | None |
| A | With caster adjuster-foot kit |
| K Note 2) | With fluid fill port |

Note 1) Equipped with an earth leakage breaker as standard.
Note 2) This is a manual fluid fill port that is different from the automatic fluid fill port. Fluid can be supplied manually into the tank without removing the side panel.
(Fluid can be supplied manually for the model without the symbol K if the side panel is removed.)

## Specifications

| Model | | | HRSH100-A□-40-□ | HRSH150-A□-40-□ | HRSH200-A□-40-□ | HRSH250-A□-40-□ | HRSH300-A□-40-□ |
|---|---|---|---|---|---|---|---|
| Cooling method | | | Air-cooled refrigeration | | | | |
| Refrigerant | | | R410A (HFC): GWP2088 | | | | |
| Control method | | | PID control | | | | |
| Ambient temperature/Altitude Note 1), Note 8) | | [°C] | Temperature: -20 to 45, Altitude: less than 3000 m | | | | |
| Circulating fluid system | Circulating fluid Note 2) | | Tap water, 15 to 40 % Ethylene glycol aqueous solution, Deionised water | | | | |
| | Set temperature range Note 1) | [°C] | 5 to 35 | | | | |
| | Cooling capacity Note 3), Note 8) | [kW] | 10.5 | 15.7 | 20.5 | 25 | 28 |
| | Heating capacity Note 4) | [kW] | 2.5 | 3 | 5.5 | 7.5 | |
| | Temperature stability Note 5) | [°C] | ±0.1 | | | | |
| | Pump capacity: Rated flow (Outlet) | [l/min] | 45 (0.43 MPa) | 45 (0.45 MPa) | | 125 (0.5 MPa) | |
| | Pump capacity: Maximum flow rate | [l/min] | 120 | 130 | | 180 | |
| | Pump capacity: Maximum pump head | [m] | 50 | | | 80 | |
| | Settable pressure range Note 6) | [MPa] | 0.1 to 0.5 | | | 0.1 to 0.8 | |
| | Minimum operating flow rate Note 7) | [l/min] | 20 | 25 | | 40 | |
| | Tank capacity | [L] | 25 | 42 | | 60 | |
| | Circulating fluid outlet, circulating fluid return port | | Rc 1 (Symbol F: G 1, Symbol N: NPT 1) | | | | |
| | Tank drain port | | Rc 3/4 (Symbol F: G 3/4, Symbol N: NPT 3/4) | | | | |
| | Automatic fluid fill system (Standard): Supply side pressure range | [MPa | 0.2 to 0.5 | | | | |
| | Automatic fluid fill system (Standard): Supply side fluid temperature | [°C] | 5 to 35 | | | | |
| | Automatic fluid fill system (Standard): Automatic fluid fill port | | Rc 1/2 (Symbol F: G 1/2, Symbol N: NPT 1/2) | | | | |
| | Automatic fluid fill system (Standard): Overflow port | | Rc 1 (Symbol F: G 1, Symbol N: NPT 1) | | | | |
| | Fluid contact material | Metal | Stainless steel, Copper (Heat exchanger brazing), Brass (Y-strainer) | | | | |
| | | Resin | PTFE, PU, FKM, EPDM, PVC, NBR, POM, PE, NR | | | | |
| Electrical system | Power supply | | 3-phase 380 to 415 VAC (50/60Hz)<br>Allowable voltage range ±10 % (No continuous voltage fluctuation) | | | | |
| | Earth leakage breaker: Rated current | [A] | 20 | 30 | | | |
| | Earth leakage breaker: Sensitivity of leak current | [mA] | 30 | | | | |
| | Rated operating current Note 5) | [A] | 7.4 | 9.3 | 12.8 | 16 | 18 |
| | Rated power consumption Note 5) | [kW (kVA)] | 4.6 (5.1) | 5.8 (6.4) | 8.2 (8.9) | 10.1 (11.1) | 10.8 (12.3) |
| Noise level (Front 1 m/Height 1 m) Note 5) | | [dB (A)] | 68 | | | | |
| Waterproof specification | | | IPX4 | | | | |
| Accessories | | | Alarm code list stickers 2 pcs. (English 1 pc./Japanese 1 pc.),<br>Operation Manual (for installation/operation) 2 pcs. (English 1 pc./Japanese 1 pc.),<br>Y-strainer (40 meshes) 25A, Barrel nipple 25A, Anchor bolt fixing brackets 2 pcs. (including 6 M8 bolts) Note 9) | | | | |
| Weight (dry state) | | [kg] | Approx. 180 | Approx. 215 | | Approx. 280 | |

Note 1) Use a 15 % ethylene glycol aqueous solution if operating in a place where the ambient temperature is from -5 to 10 °C and/or circulating fluid temperature is 10 °C or less.
Use a 40 % ethylene glycol aqueous solution if operating in a place where the ambient temperature is from -20 to 5 °C.
Note 2) Use fluid in condition below as the circulating fluid.
Tap water: please refer to "Specific Product Precautions".
15 to 40 % ethylene glycol aqueous solution: diluted by tap water in condition above without any additives such as antiseptics.
Deionised water: Electric conductivity 1 μS/cm or higher (Electric resistivity 1 MΩ·cm or lower)
Note 3) ① Ambient temperature: 32 °C, ② Circulating fluid: Tap water, ③ Circulating fluid temperature: 20 °C, ④ Circulating fluid flow rate: Rated flow, ⑤ Power supply: 400 VAC
Note 4) ① Ambient temperature: 32 °C, ② Circulating fluid: Tap water, ③ Circulating fluid flow rate: Rated flow, ④ Power supply: 400 VAC
Note 5) ① Ambient temperature: 32 °C, ② Circulating fluid: Tap water, ③ Circulating fluid temperature: 20 °C, ④ Load: Same as the cooling capacity, ⑤ Circulating fluid flow rate: Rated flow, ⑥ Power supply: 400 VAC, ⑦ Piping length: Shortest
Note 6) With the pressure control mode by inverter. When the pressure control mode is not used, the pump power frequency set mode can be used.
Note 7) Fluid flow rate to maintain the cooling capacity and the temperature stability. If the actual flow rate is lower than this, please install a by-pass piping.
Note 8) If the product is used at altitude of 1000 m or higher, refer to "Operating Environment/Storage Environment" (page 41) Item 14 "* For altitude of 1000 m or higher".
Note 9) The anchor bolt fixing brackets (including 6 M8 bolts) are used for fixing to wooden skids when packaging the thermo-chiller. No anchor bolt is included.

# Thermo-chiller Inverter Type Large Type
# Water-cooled 400 V Type
# Series HRSH

## How to Order

**HRSH 250 – W F – 40 – □**

**Cooling capacity**

| | |
|---|---|
| 100 | 11.5 kW |
| 150 | 15.7 kW |
| 200 | 20.6 kW |
| 250 | 24 kW |

**Cooling method**

| | |
|---|---|
| W | Water-cooled refrigeration |

**Pipe thread type**

| | |
|---|---|
| — | Rc |
| F | G (with Rc-G conversion fitting) |
| N | NPT (with Rc-NPT conversion fitting) |

**Power supply**

| | |
|---|---|
| 40 | 3-phase 380 to 415 VAC (50/60Hz) |

**Option**

| | |
|---|---|
| — | None |
| A | With caster adjuster-foot kit |
| K Note 2) | With fluid fill port |

Note 1) Equipped with an earth leakage breaker as standard.
Note 2) This is a manual fluid fill port that is different from the automatic fluid fill port. Fluid can be supplied manually into the tank without removing the side panel.
(Fluid can be supplied manually for the model without the symbol K if the side panel is removed.)

## Specifications

| Model | | | | HRSH100-W□-40-□ | HRSH150-W□-40-□ | HRSH200-W□-40-□ | HRSH250-W□-40-□ |
|---|---|---|---|---|---|---|---|
| Cooling method | | | | Water-cooled refrigeration | | | |
| Refrigerant | | | | R410A (HFC): GWP2088 | | | |
| Control method | | | | PID control | | | |
| Ambient temperature/Altitude Note 1), Note 8) | | | [°C] | Temperature: 2 to 45, Altitude: less than 3000 m | | | |
| Circulating fluid system | Circulating fluid Note 2) | | | Tap water, 15 % Ethylene glycol aqueous solution, Deionised water | | | |
| | Set temperature range Note 1) | | [°C] | 5 to 35 | | | |
| | Cooling capacity Note 3), Note 8) | | [kW] | 11.5 | 15.7 | 20.6 | 24 |
| | Heating capacity Note 4) | | [kW] | 2.5 | 3.5 | 4.0 | 7.2 |
| | Temperature stability Note 5) | | [°C] | ±0.1 | | | |
| | Pump capacity | Rated flow (Outlet) | [l/min] | 45 (0.43 MPa) | 45 (0.45 MPa) | | |
| | | Maximum flow rate | [l/min] | 120 | 130 | | |
| | | Maximum pump head | [m] | 50 | | | |
| | Settable pressure range Note 6) | | [MPa] | 0.1 to 0.5 | | | |
| | Minimum operating flow rate Note 7) | | [l/min] | 20 | 25 | | |
| | Tank capacity | | [L] | 25 | 42 | | |
| | Circulating fluid outlet, circulating fluid return port | | | Rc 1 (Symbol F: G 1, Symbol N: NPT 1) | | | |
| | Tank drain port | | | Rc 3/4 (Symbol F: G 3/4, Symbol N: NPT 3/4) | | | |
| | Automatic fluid fill system (Standard) | Supply side pressure range | [MPa] | 0.2 to 0.5 | | | |
| | | Supply side fluid temperature | [°C] | 5 to 35 | | | |
| | | Automatic fluid fill port | | Rc 1/2 (Symbol F: G 1/2, Symbol N: NPT 1/2) | | | |
| | | Overflow port | | Rc 1 (Symbol F: G 1, Symbol N: NPT 1) | | | |
| | Fluid contact material | | Metal | Stainless steel, Copper (Heat exchanger brazing), Brass (Y-strainer) | | | |
| | | | Resin | PTFE, PU, FKM, EPDM, PVC, NBR, POM, PE, NR | | | |
| Facility water system | Temperature range | | [°C] | 5 to 40 | | | |
| | Pressure range | | [MPa] | 0.3 to 0.5 | | | |
| | Required flow | | [l/min] | 25 | 30 | 50 | 55 |
| | Facility water pressure differential | | [MPa] | 0.3 or more | | | |
| | Facility water inlet/outlet | | | Rc 1 (Symbol F: G 1, Symbol N: NPT 1) | | | |
| | Fluid contact material | | Metal | Stainless steel, Copper (Heat exchanger brazing), Bronze, Brass | | | |
| | | | Resin | PTFE, NBR, EPDM | | | |
| Electrical system | Power supply | | | 3-phase 380 to 415 VAC (50/60Hz), Allowable voltage range ±10 % (No continuous voltage fluctuation) | | | |
| | Applicable earth leakage breaker | Rated current | [A] | 20 | 30 | | |
| | | Sensitivity of leak current | [mA] | 30 | | | |
| | Rated operating current Note 5) | | [A] | 7.3 | 8.8 | 10.6 | 12.8 |
| | Rated power consumption Note 5) | | [kW (kVA)] | 4.4 (5.0) | 5.3 (6.1) | 6.6 (7.4) | 8.2 (8.9) |
| Noise level (Front 1 m/Height 1 m) Note 5) | | | [dB (A)] | 61 | 60 | | 61 |
| Waterproof specification | | | | IPX4 | | | |
| Accessories | | | | Alarm code list stickers 2 pcs. (English 1 pc./Japanese 1 pc.), Operation Manual (for installation/operation) 2 pcs. (English 1 pc./Japanese 1 pc.), Y-strainer (40 meshes) 25A, Barrel nipple 25A, Anchor bolt fixing brackets 2 pcs. (including 6 M8 bolts) Note 9) | | | |
| Weight (dry state) | | | [kg] | Approx. 150 | Approx. 180 | | |

Note 1) Use a 15 % ethylene glycol aqueous solution if operating in a place where the ambient temperature and/or circulating fluid temperature is 10 °C or less.
Note 2) Use fluid in condition below as the circulating fluid.
Tap water: please refer to “Specific Product Precautions”.
15 % ethylene glycol aqueous solution: diluted by tap water in condition above without any additives such as antiseptics.
Deionised water: Electric conductivity 1 μS/cm or higher (Electric resistivity 1 MΩ·cm or lower)
Note 3) ① Facility water temperature: 32 °C, ② Circulating fluid: Tap water, ③ Circulating fluid temperature: 20 °C, ④ Circulating fluid flow rate: Rated flow, ⑤ Power supply: 400 VAC
Note 4) ① Facility water temperature: 32 °C, ② Circulating fluid: Tap water, ③ Circulating fluid flow rate: Rated flow, ④ Power supply: 400 VAC
Note 5) ① Facility water temperature: 32 °C, ② Circulating fluid: Tap water, ③ Circulating fluid temperature: 20 °C, ④ Load: Same as the cooling capacity, ⑤ Circulating fluid flow rate: Rated flow, ⑥ Power supply: 400 VAC, ⑦ Piping length: Shortest
Note 6) With the pressure control mode by inverter. When the pressure control mode is not used, the pump power frequency set mode can be used.
Note 7) Fluid flow rate to maintain the cooling capacity and the temperature stability. If the actual flow rate is lower than this, please install a by-pass piping.
Note 8) If the product is used at altitude of 1000 m or higher, refer to “Operating Environment/Storage Environment” (page 41) Item 14 “∗ For altitude of 1000 m or higher”.
Note 9) The anchor bolt fixing brackets (including 6 M8 bolts) are used for fixing to wooden skids when packaging the thermo-chiller. No anchor bolt is included.

## Cooling Capacity

∗ If the product is used at altitude of 1000 m or higher, refer to “Operating Environment/Storage Environment” (page 41) Item 13 “∗ For altitude of 1000 m or higher”.

### HRSH100-A□-20-□S / HRSH100-A□-40-□

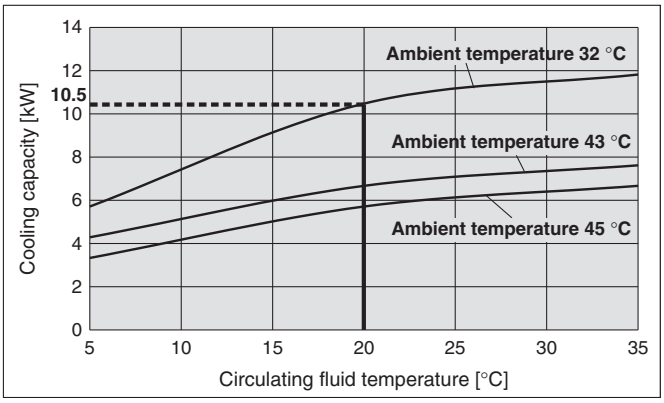


### HRSH100-W□-20-□S / HRSH100-W□-40-□

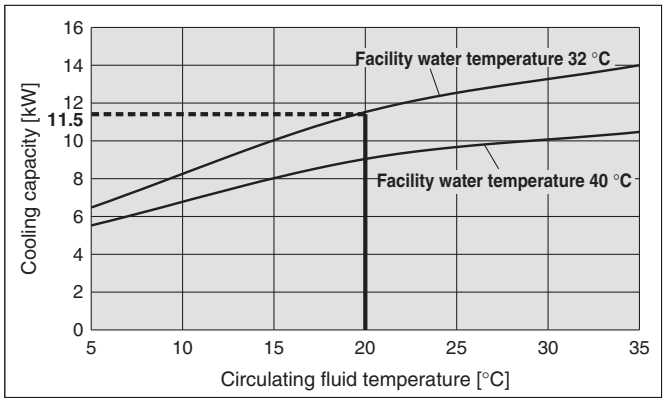


### HRSH150-A□-20-□S / HRSH150-A□-40-□

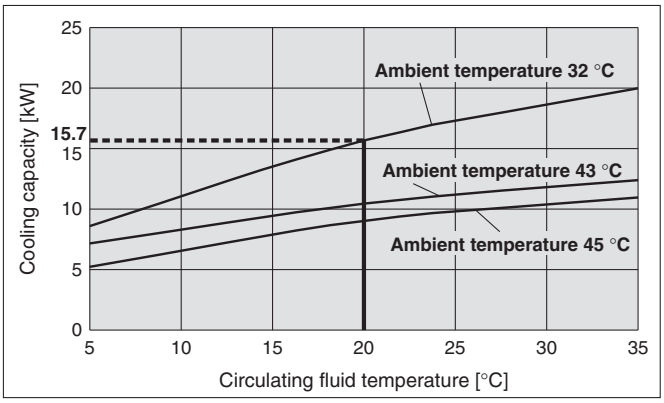


### HRSH150-W□-20-□S / HRSH150-W□-40-□

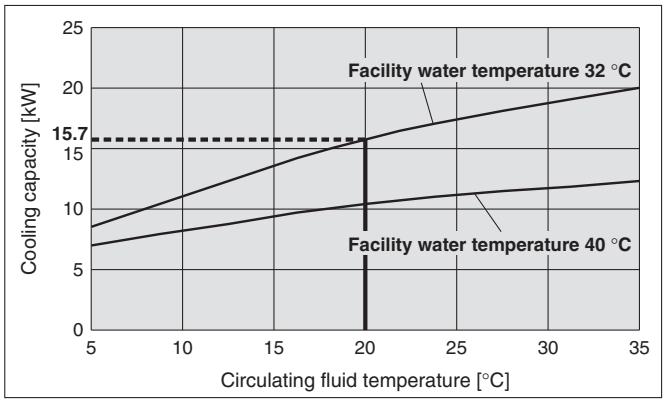


### HRSH200-A□-20-□S / HRSH200-A□-40-□

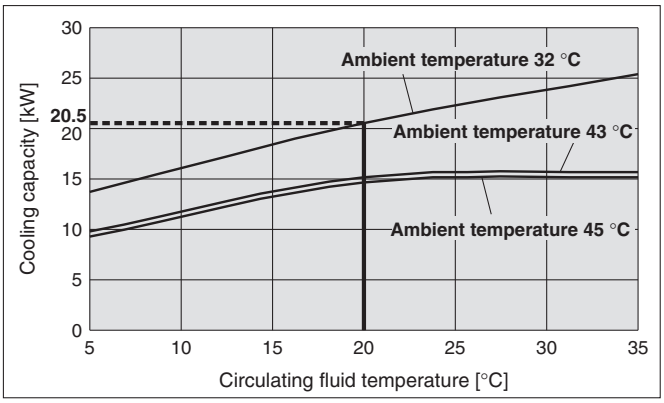


### HRSH200-W□-20-□S / HRSH200-W□-40-□

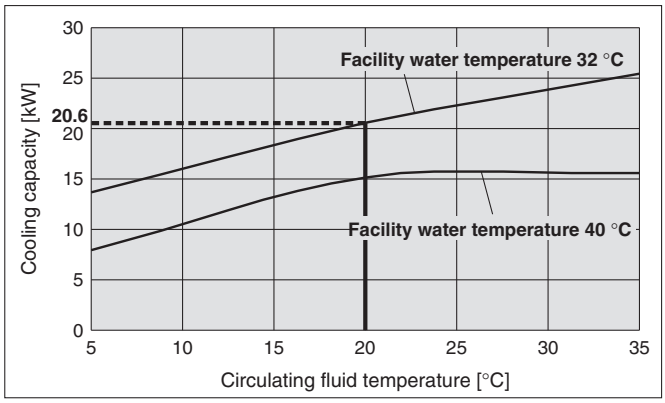


### HRSH250-A□-20-□S / HRSH250-A□-40-□

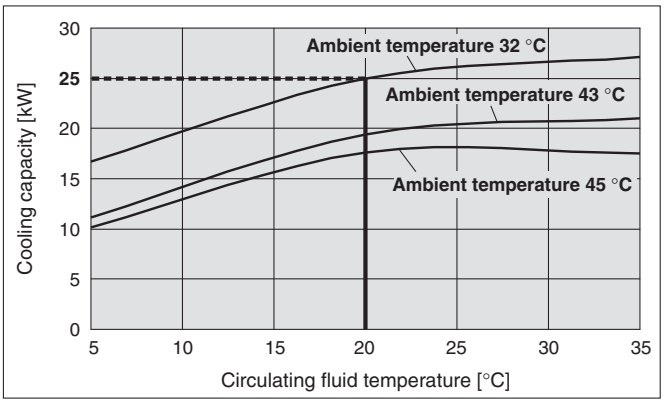


### HRSH250-W□-20-□S / HRSH250-W□-40-□

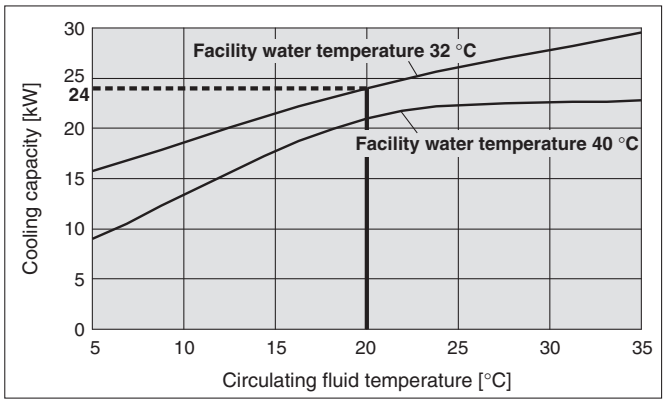

## Cooling Capacity

∗ If the product is used at altitude of 1000 m or higher, refer to “Operating Environment/Storage Environment” (page 41) Item 13 “∗ For altitude of 1000 m or higher”.

### HRSH300-A□-20/40-□

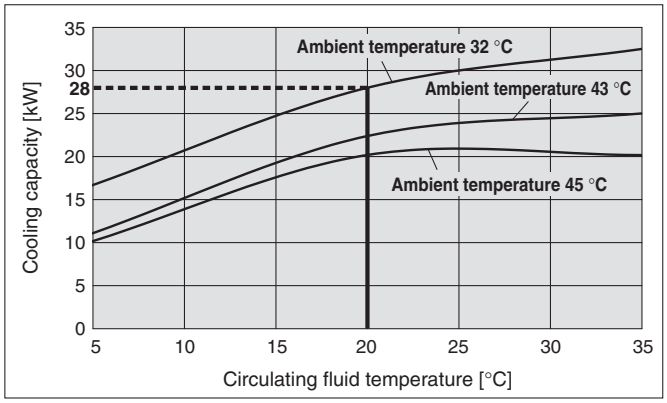


## Pump Capacity

### HRSH100-A□-20-□S / HRSH100-A□-40-□
### HRSH100-W□-20-□S / HRSH100-W□-40-□

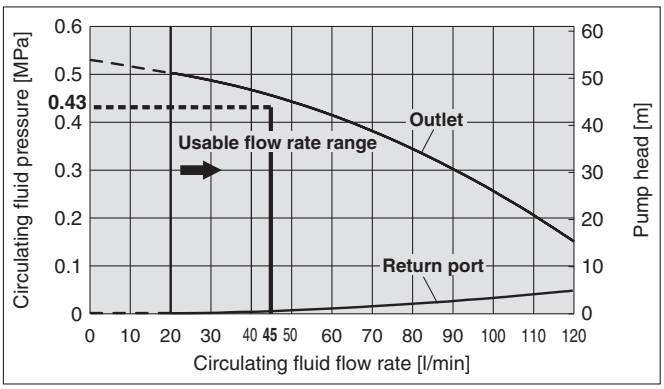


### HRSH150-A□-20-□S / HRSH150-A□-40-□
### HRSH150-W□-20-□S / HRSH150-W□-40-□
### HRSH200-A□-20-□S / HRSH200-A□-40-□
### HRSH200-W□-20-□S / HRSH200-W□-40-□
### HRSH250-W□-20-□S / HRSH250-W□-40-□

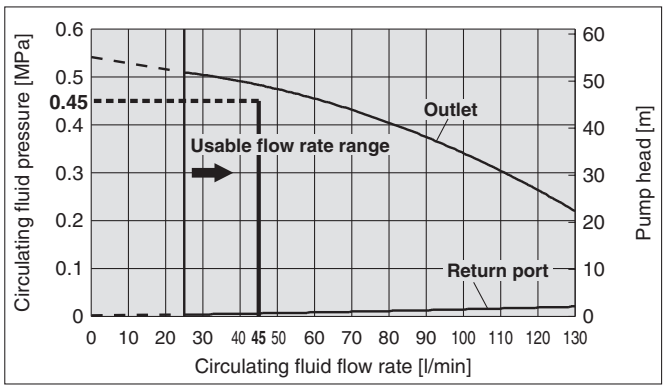


### HRSH250-A□-20-□S / HRSH250-A□-40-□
### HRSH300-A□-20-□S / HRSH300-A□-40-□

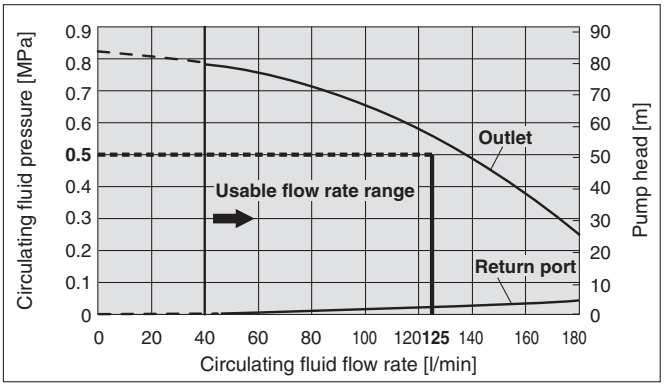

## Dimensions

### HRSH100/150/200-A-20-S (Air-cooled 200 V type)
### HRSH100/150/200-A-40 (Air-cooled 400 V type)

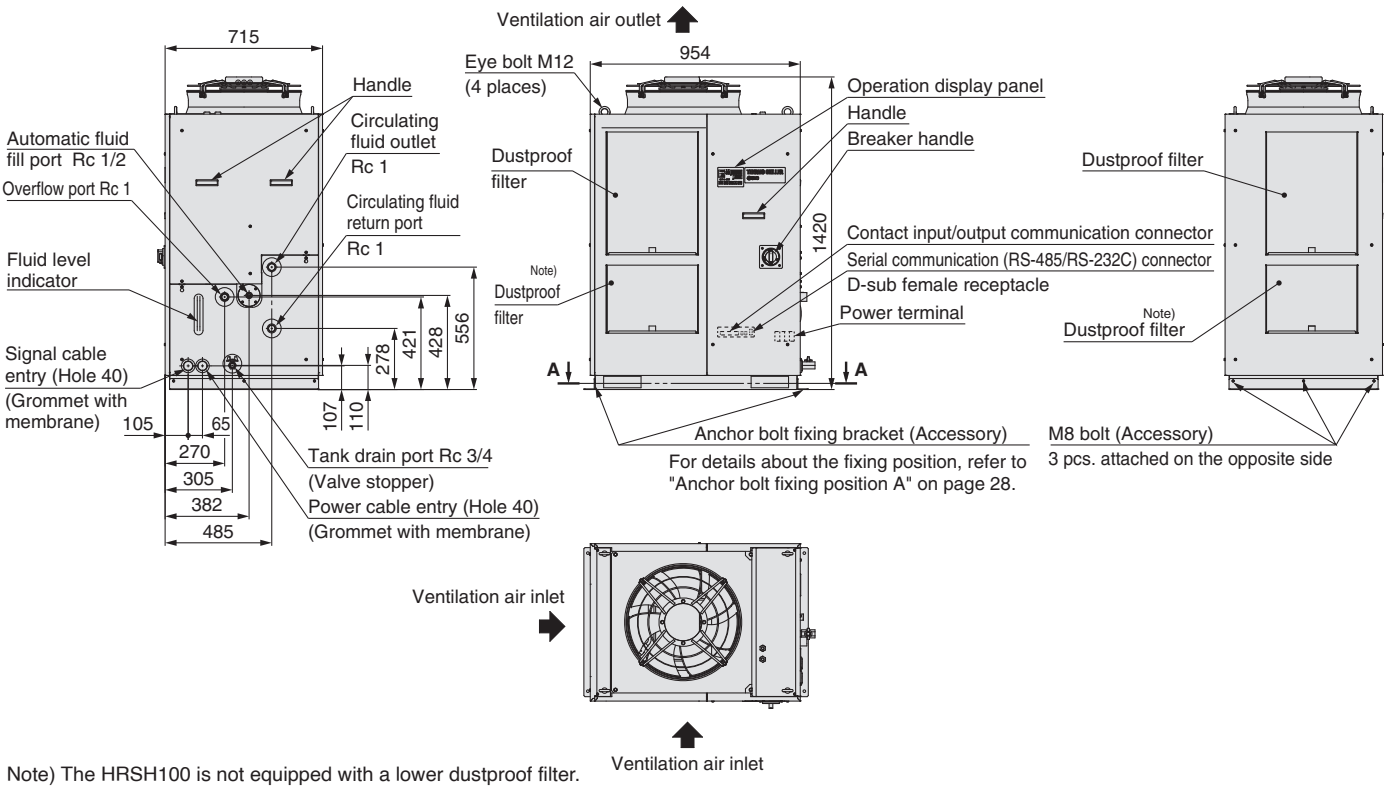


Note) The HRSH100 is not equipped with a lower dustproof filter.

### HRSH250/300-A-20-S (Air-cooled 200 V type)
### HRSH250/300-A-40 (Air-cooled 400 V type)

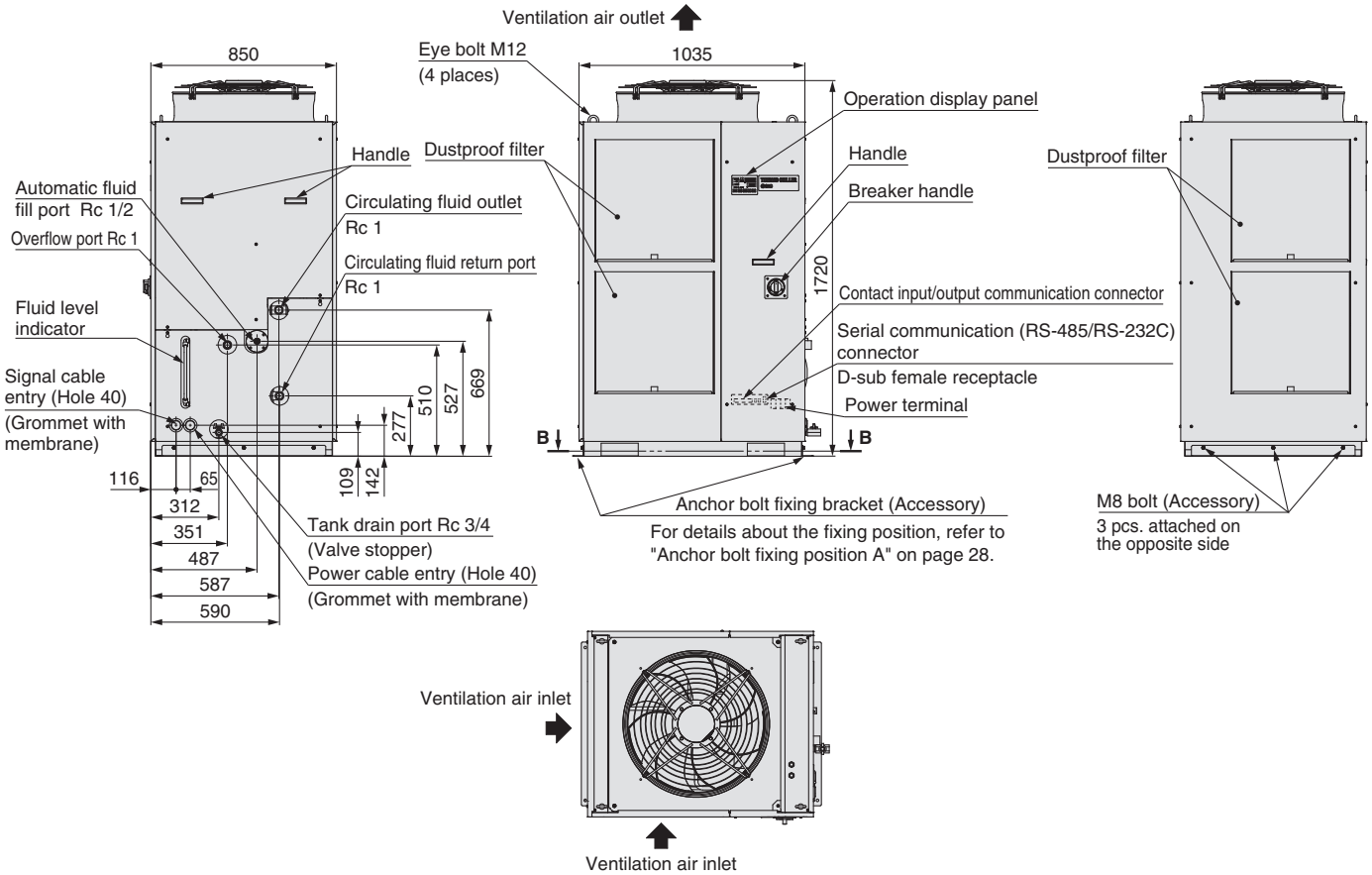

## Dimensions

### HRSH100/150/200/250-W-20-S (Water-cooled 200 V type)
### HRSH100/150/200/250-W-40 (Water-cooled 400 V type)

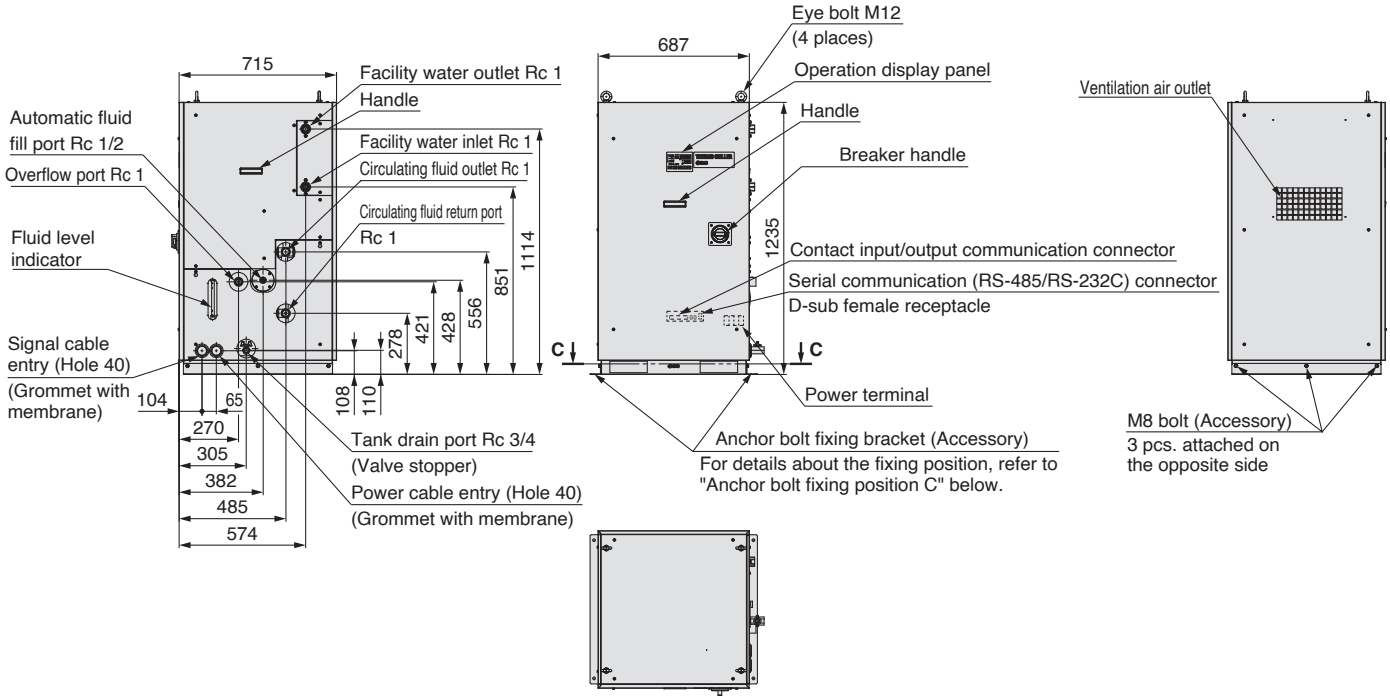


### Anchor bolt fixing position A

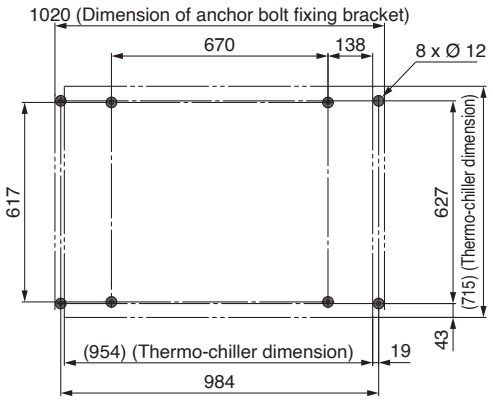


View A-A

### Anchor bolt fixing position B

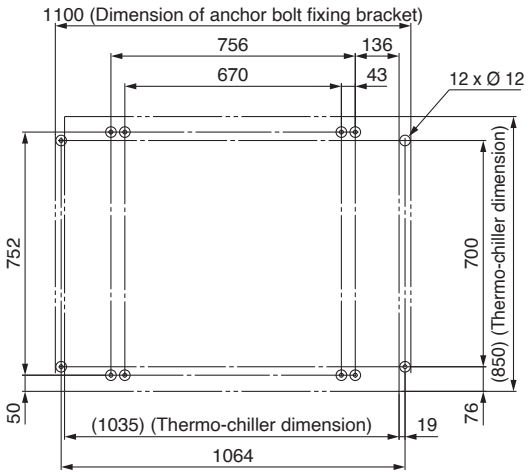


View B-B

### Anchor bolt fixing position C

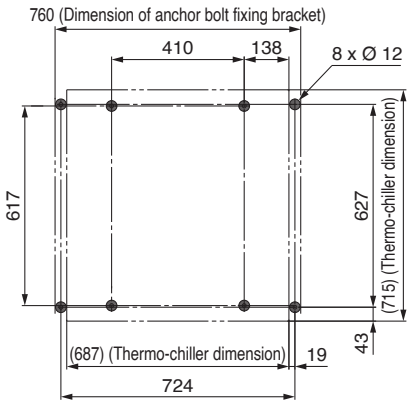


View C-C

### Accessory: Y-strainer mounting view

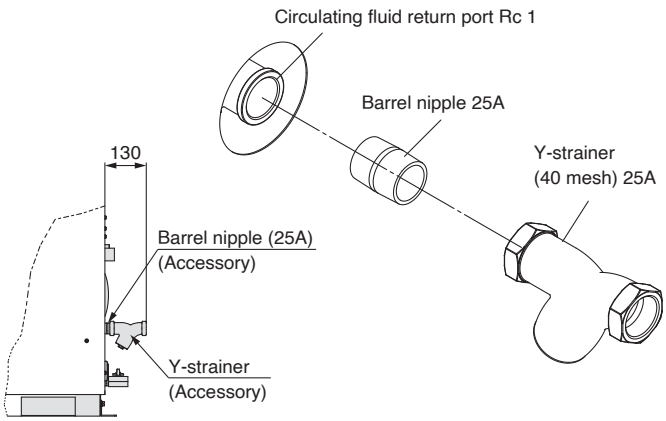

## Recommended External Piping Flow

External piping circuit is recommended as shown below.

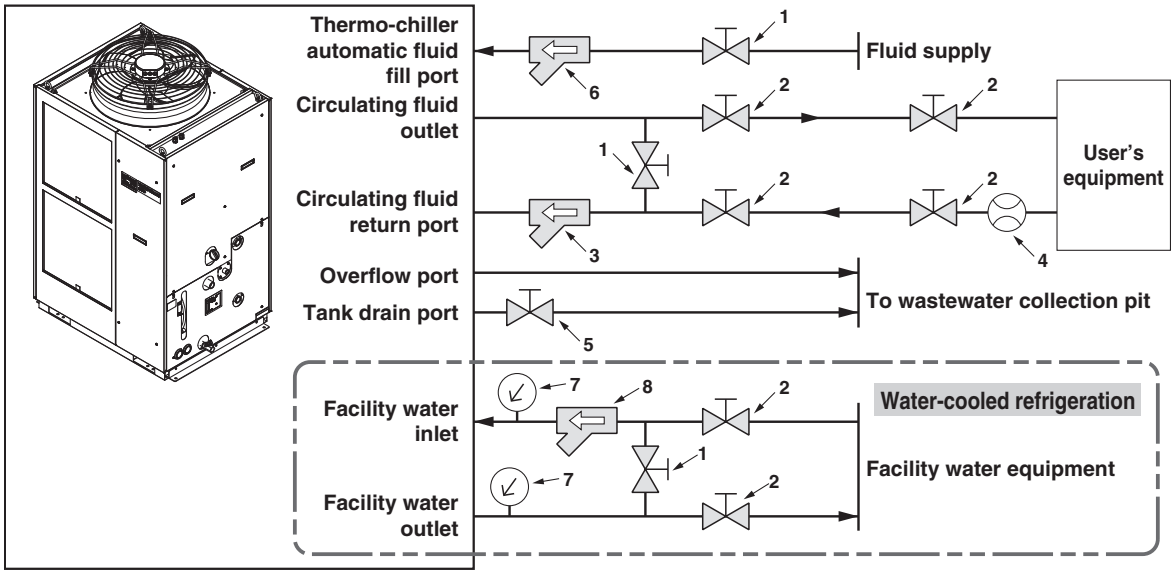


∗ Ensure that the overflow port is connected to the wastewater collection pit in order to avoid damage to the tank of the thermo-chiller.

| No. | Description | Size |
|---|---|---|
| 1 | Valve | Rc 1/2 |
| 2 | Valve | Rc 1 |
| 3 | Y-strainer (#40) (Accessory) | Rc 1 |
| 4 | Flow meter | Prepare a flow meter with an appropriate flow range. |
| 5 | Valve (Part of thermo-chiller) | Rc 3/4 |
| 6 | Y-strainer (#40) | Rc 1/2 |
| 7 | Pressure gauge | 0 to 1.0 MPa |
| 8 | Y-strainer (#40) | Rc 1 |

## Cable Specifications

Power supply and signal cable should be prepared by user.

### Power Cable Specifications

| Applicable model | Rated value for thermo-chiller | | | Power cable examples | |
|---|---|---|---|---|---|
| | Power supply | Applicable breaker rated current | Terminal block thread size | Cable size | Crimp terminal on the thermo-chiller side |
| HRSH100-□□-20S<br>HRSH150-□□-20S | 3-phase 200 VAC (50 Hz)<br>3-phase 200 to 230 VAC (60 Hz) | 30 A | M5 | 4 cores x 5.5 mm²<br>(4 cores x AWG10)<br>(Including grounding cable) | R5.5-5 |
| HRSH200-□□-20S | | 40 A | | 4 cores x 8 mm²<br>(4 cores x AWG8)<br>(Including grounding cable) | R8-5 |
| HRSH250-□□-20S | | 50 A | | 4 cores x 8 mm²<br>(4 cores x AWG8)<br>(Including grounding cable) | R8-5 |
| HRSH100-□□-40 | 3-phase 380 to 415 VAC (50/60Hz) | 20 A | | 3 x 5.5 mm² (3 x AWG10)<br>(Power supply)<br>1 x 14 mm² (1 x AWG6)<br>(Grounding cable) | R5.5-5<br>(Power supply)<br>R14-5<br>(Grounding cable) |
| HRSH150-□□-40<br>HRSH200-□□-40<br>HRSH250-□□-40 | | 30 A | | | |

Note) An example of the cable specifications is when two kinds of vinyl insulated wires with a continuous allowable operating temperature of 70 °C at 600 V, are used at an ambient temperature of 30 °C. Select the proper size of cable according to an actual condition.

### Signal Cable Specifications

| Terminal specifications | | Cable specifications |
|---|---|---|
| Terminal block screw diameter | Recommended crimp terminal | 0.75 mm² (AWG18)<br>Shielded cable |
| M3 | Y-shape crimp terminal<br>1.25Y-3 | |

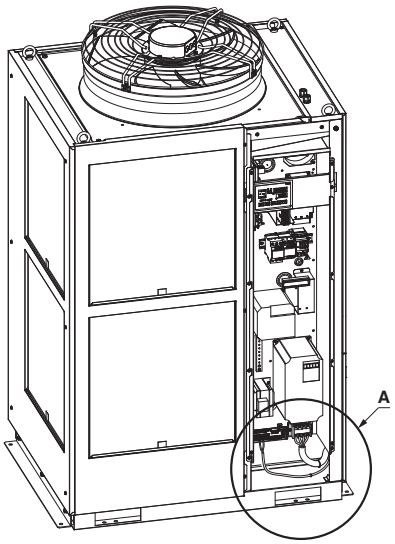


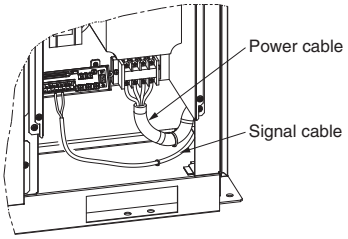


**Partially enlarged view A**

## Operation Display Panel

The basic operation of this unit is controlled through the operation display panel on the front of the product.

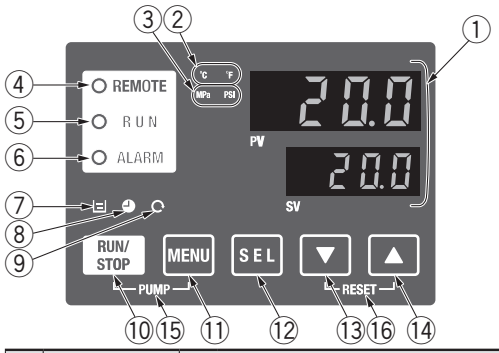


| No. | Description | Function | |
|---|---|---|---|
| ① | **Digital display (7-segment and 4 digits)** | PV | Displays the circulating fluid current discharge temperature and pressure and alarm codes and other menu items (codes). |
| | | SV | Displays the circulating fluid discharge temperature and the set values of other menus. |
| ② | **[°C] [°F] lamp** | Equipped with a unit conversion function. Displays the unit of displayed temperature (default setting: °C). | |
| ③ | **[MPa] [PSI] lamp** | Equipped with a unit conversion function. Displays the unit of displayed pressure (default setting: MPa). | |
| ④ | **[REMOTE] lamp** | Enables remote operation (start and stop) by communication. Lights up during remote operation. | |
| ⑤ | **[RUN] lamp** | Lights up when the product is started, and goes off when it is stopped. Flashes during stand-by for stop or anti-freezing function, or independent operation of the pump. | |
| ⑥ | **[ALARM] lamp** | Flashes with buzzer when alarm occurs. | |
| ⑦ | **[ ] lamp** | Lights up when the surface of the fluid level indicator falls below the L level. | |
| ⑧ | **[ ] lamp** | Equipped with a timer for start and stop. Lights up when this function is operated. | |
| ⑨ | **[ ] lamp** | Equipped with a power failure auto-restart function, which restarts the product automatically after stopped due to a power failure. Lights up when this function is operated. | |
| ⑩ | **[RUN/STOP] key** | Makes the product start or stop. | |
| ⑪ | **[MENU] key** | Shifts the main menu (display screen of circulating fluid discharge temperature and pressure) and other menus (for monitoring and entry of set values). | |
| ⑫ | **[SEL] key** | Changes the item in menu and enters the set value. | |
| ⑬ | **[▼] key** | Decreases the set value. | |
| ⑭ | **[▲] key** | Increases the set value. | |
| ⑮ | **[PUMP] key** | Press the [MENU] and [RUN/STOP] keys simultaneously. The pump starts running independently to make the product ready for start-up (release the air). | |
| ⑯ | **[RESET] key** | Press the [▼] and [▲] keys simultaneously. The alarm buzzer is stopped and the [ALARM] lamp is reset. | |

## List of Function

| No. | Function | Outline |
|---|---|---|
| 1 | **Main display** | Displays the current and set temperature of the circulating fluid, discharge pressure of the circulating fluid. Changes the circulating fluid set temperature. |
| 2 | **Alarm display menu** | Indicates alarm number when an alarm occurs. |
| 3 | **Inspection monitor menu** | Product temperature, pressure and accumulated operating time can be checked as daily inspection. Use these for daily inspection. |
| 4 | **Key-lock** | Keys can be locked so that set values cannot be changed by operator error. |
| 5 | **Timer for operation start/stop** | Timer is used to set the operation start/stop. |
| 6 | **Signal for the completion of preparation** | A signal is output when the circulating fluid temperature reaches the set temperature, when using contact input/output and serial communication. |
| 7 | **Offset function** | Use this function when there is a temperature offset between the discharge temperature of the thermo-chiller and user's equipment. |
| 8 | **Reset after power failure** | Start operation automatically after the power supply is turned on. |
| 9 | **Key click sound setting** | Operation panel key sound can be set on/off. |
| 10 | **Changing temp. unit** | Temperature unit can be changed.<br>Centigrade [°C] ⇔ Fahrenheit [°F] |
| 11 | **Changing pressure unit** | Pressure unit can be changed.<br>MPa ⇔ PSI |
| 12 | **Data reset** | Functions can be reset to the default settings (settings when shipped from the factory). |
| 13 | **Accumulation time reset** | Reset function when the pump, the fan or the compressor is replaced. Reset the accumulated time here. |
| 14 | **Pump operation mode set** | The fluid supply mode of the pump can be changed<br>Pressure control mode ⇔ Frequency set mode |
| 15 | **Anti-freezing function** | Circulating fluid is protected from freezing during winter or at night. Set beforehand if there is a risk of freezing. |
| 16 | **Warming-up function** | When circulating fluid temperature rising time at starting needs shortening during winter or at night, set beforehand. |
| 17 | **Anti-snow coverage function** | If there will be a possibility of the snow coverage due to the change of the installation environment (season, weather), set beforehand. Note) |
| 18 | **Alarm buzzer sound setting** | Alarm sound can be set to on/off. |
| 19 | **Alarm customizing** | Operation during alarm condition and threshold values can be changed depending on the alarm type. |
| 20 | **Communication** | This function is used for contact input/output or serial communication. |

Note) Does not occur on HRSH090.

## Alarm

This unit has up to 44 types of alarms as standard, and displays each of them by its alarm code on the PV screen with the [ALARM] lamp ([LOW LEVEL] lamp) lit up on the operation display panel. The alarm can be read out through communication.

| Code | Alarm message |
|---|---|
| AL01 | Low level in tank |
| AL02 | High circulating fluid discharge temp. |
| AL03 | Circulating fluid discharge temp. rise |
| AL04 | Circulating fluid discharge temp. drop |
| AL05 | High circulating fluid return temp. |
| AL06 | High circulating fluid discharge pressure Note 1) |
| AL07 | Abnormal pump operation Note 1) |
| AL08 | Circulating fluid discharge pressure rise |
| AL09 | Circulating fluid discharge pressure drop |
| AL10 | High compressor intake temp. |
| AL11 | Low compressor intake temp. |
| AL12 | Low super heat temp. |
| AL13 | High compressor discharge pressure |
| AL15 | Refrigeration circuit pressure (high pressure side) drop |
| AL16 | Refrigeration circuit pressure (low pressure side) rise |
| AL17 | Refrigeration circuit pressure (low pressure side) drop |

| Code | Alarm message |
|---|---|
| AL18 | Compressor running failure |
| AL19 | Communication error |
| AL20 | Memory error |
| AL21 | DC line fuse cut |
| AL22 | Circulating fluid discharge temp. sensor failure |
| AL23 | Circulating fluid return temp. sensor failure |
| AL24 | Compressor intake temp. sensor failure |
| AL25 | Circulating fluid discharge pressure sensor failure |
| AL26 | Compressor discharge pressure sensor failure |
| AL27 | Compressor intake pressure sensor failure |
| AL28 | Pump maintenance |
| AL29 | Fan maintenance Note 2) |
| AL30 | Compressor maintenance |
| AL31 | Contact input 1 signal detection |
| AL32 | Contact input 2 signal detection |
| AL37 | Compressor discharge temp. sensor failure |

| Code | Alarm message |
|---|---|
| AL38 | Compressor discharge temp. rise |
| AL39 | Internal unit fan stoppage |
| AL40 | Dustproof filter maintenance Note 2) |
| AL41 | Power stoppage |
| AL42 | Compressor waiting |
| AL43 | Fan breaker trip Note 2) |
| AL44 | Fan inverter error Note 2) |
| AL45 | Compressor breaker trip Note 3) |
| AL46 | Compressor inverter error |
| AL47 | Pump breaker trip Note 3) |
| AL48 | Pump inverter error |
| AL49 | Air exhaust fan stoppage Note 4) |

Note 1) Does only occur on HRSH090.
Note 2) Does not occur on the product of water-cooled refrigeration type.
Note 3) Does not occur on the product of power supply specification '-20'.
Note 4) Does not occur on the product of air-cooled refrigeration type.
∗ For details, read the Operation Manual.

**For details, refer to the Operation Manual. Please download it via our website, http://www.smc.eu**

## Communication Function

### Contact Input/Output

| Item | | Specifications |
|---|---|---|
| **Connector type** | | M3 terminal block |
| **Input signal** | **Insulation method** | Photocoupler |
| | **Rated input voltage** | 24 V DC |
| | **Operating voltage range** | 21.6 to 26.4 V DC |
| | **Rated input current** | 5 mA TYP |
| | **Input impedance** | 4.7 kΩ |
| **Contact output signal** | **Rated load voltage** | 48 VAC or less/30 V DC or less |
| | **Maximum load current** | 500 mA AC/DC (resistance load) |
| | **Minimum load current** | 5 V DC 10 mA |
| **Output voltage** | | 24 V DC ±10 % 500 mA MAX (No inductive load) |
| **Circuit diagram** | | 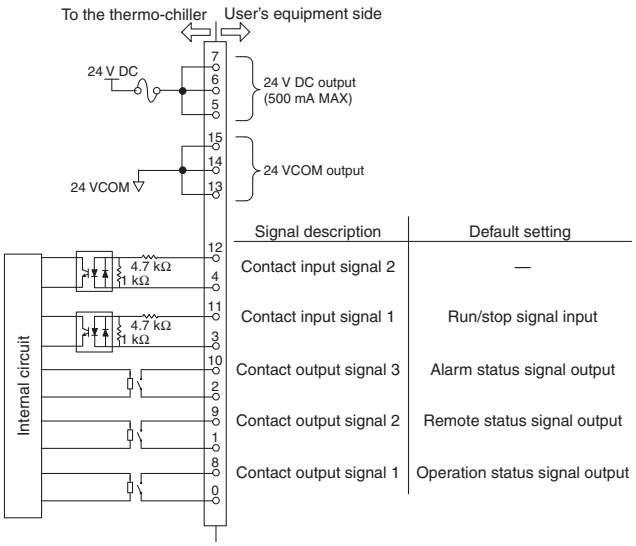 |



∗ The pin numbers and output signals can be set by user. For details, refer to "Operation Manual, Communication function".

### Serial Communication

The serial communication (RS-485/RS-232C) enables the following items to be written and read out.
For details, refer to "Operation Manual, Communication function".

**Writing**

Run/Stop
Circulating fluid temperature setting (SV)

**Readout**

Circulating fluid present temperature
Circulating fluid discharge pressure
Status information
Alarm occurrence information

| Item | Specifications | |
|---|---|---|
| **Connector type** | D-sub 9-pin, Female connector | |
| **Protocol** | Modicon Modbus compliant/Simple communication protocol | |
| **Standards** | EIA standard RS-485 | EIA standard RS-232C |
| **Circuit diagram** | 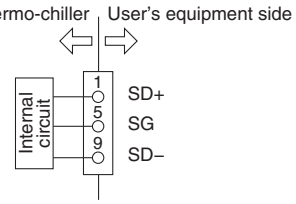 | 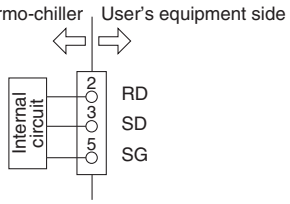 |



∗ The terminal resistance of RS-485 (120 Ω) can be switched by the operation display panel. For details, refer to "Operation Manual, Communication function".
Do not connect other than in the way shown above, as it can result in failure.

**Please download the Operation Manual via our website, http://www.smc.eu**

# Options

**Note) Select the option when ordering the thermo-chiller because the option cannot be added after purchasing the unit.**

**K** Option symbol

## With Fluid Fill Port

**HRSH□-□□-□-K**

**With fluid fill port**

When the automatic fluid fill in port is not used,
fluid can be supplied manually without removing the panel.

| Applicable model | Dimension [mm] | |
|---|---|---|
| | A | B |
| **HRSH100-□□-20-KS**<br>**HRSH100-□□-40-K**<br>**HRSH150-□□-20-KS**<br>**HRSH150-□□-40-K**<br>**HRSH200-□□-20-KS**<br>**HRSH200-□□-40-K**<br>**HRSH250-W□-20-KS**<br>**HRSH250-W□-40-K** | 271 | 609 |
| **HRSH250-A□-20-KS**<br>**HRSH250-A□-40-K**<br>**HRSH300-A□-20-KS**<br>**HRSH300-A□-40-K** | 372 | 708 |

Note) Not for HRSH090.

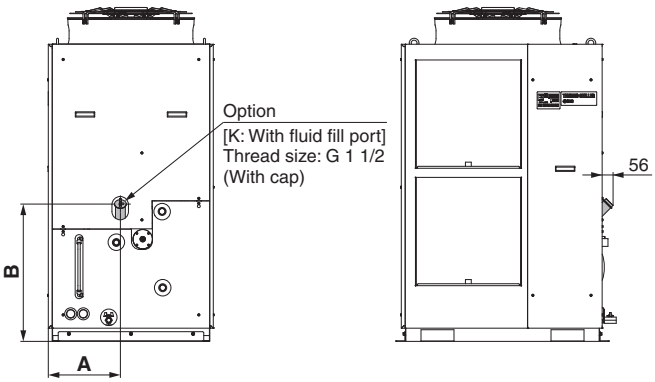


**(The figure shows the HRSH250-A-20-KS.)**

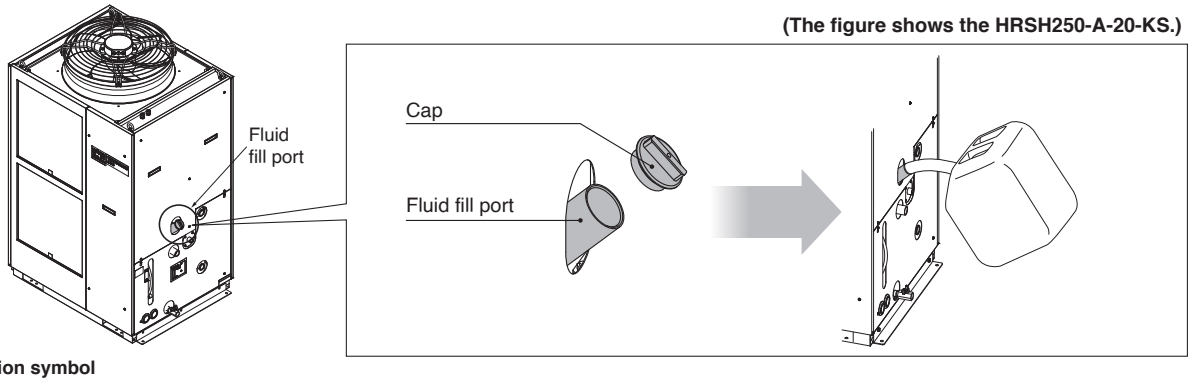


**A** Option symbol

## Caster Adjuster-foot Kit

**HRSH□-□□-□-A**

**With caster adjuster-foot**

Unfixed casters and adjuster feet stops are mounted.

| Applicable model | Dimension [mm] | | |
|---|---|---|---|
| | A | B | C |
| **HRSH250-A□-20-AS**<br>**HRSH250-A□-40-A**<br>**HRSH300-A□-20-AS**<br>**HRSH300-A□-40-A** | 916 | 536 | 1838 |
| **HRSH100-A□-20-AS**<br>**HRSH100-A□-40-A**<br>**HRSH150-A□-20-AS**<br>**HRSH150-A□-40-A**<br>**HRSH200-A□-20-AS**<br>**HRSH200-A□-40-A** | 830 | 401 | 1538 |
| **HRSH100-W□-20-AS**<br>**HRSH100-W□-40-A**<br>**HRSH150-W□-20-AS**<br>**HRSH150-W□-40-A**<br>**HRSH200-W□-20-AS**<br>**HRSH200-W□-40-A**<br>**HRSH250-W□-20-AS**<br>**HRSH250-W□-40-A** | 570 | | 1353 |

Note) Not for HRSH090.

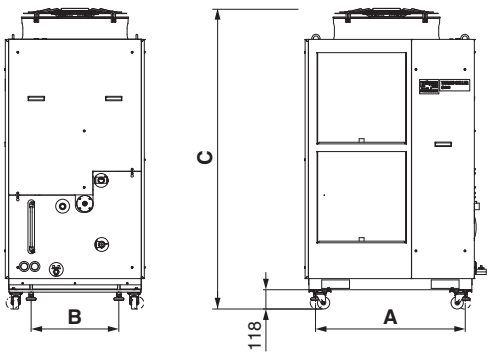

**J** Option symbol

## With Automatic Fluid Fill Function

**HRSH090−□□−40-J**

**HRSH090−□□−20-JS**

**With automatic fluid fill function**

By installing this at the automatic fluid fill port, the circulating fluid can be automatically supplied to the product using a built-in solenoid valve for a water fill while the circulating fluid is decreasing.

| Applicable model | HRSH090-□□-40-J / HRSH090-□□-20-JS |
|---|---|
| Fluid fill method | Built-in solenoid valve for automatic water fill |
| Fluid fill pressure [MPa] | 0.2 to 0.5 |
| Feed water temperature [°C] | 5 to 40 |

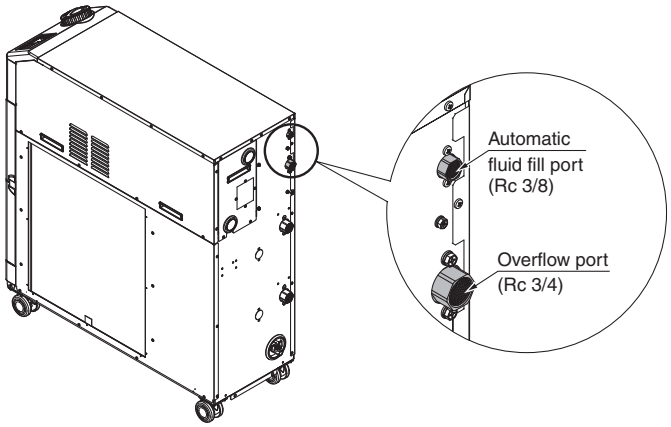


**M** Option symbol

## Applicable to Deionised Water Piping

**HRSH090−□□−40-M**

**HRSH090−□□−20-MS**

**Applicable to deionised water piping**

Contact material of the circulating fluid circuit is made from non-copper materials.

| Applicable model | HRSH090-□□-40-M / HRSH090-□□-20-MS |
|---|---|
| Contact material for circulating fluid | Stainless steel (including heat exchanger brazing), SiC, Carbon, PP, PE, POM, FKM, NBR, EPDM, PVC, PTFE |

∗ No change in external dimensions.

# Optional Accessories

## ① Piping Conversion Fitting

This is a fitting to change the port from Rc to G or NPT.

**HRSH090**

· Circulating fluid outlet, Circulating fluid return port Rc 1 → NPT 1 or G 1
· Drain port Rc 1/4 → NPT 1/4 or G 1/4
(It is not necessary to purchase this when pipe thread type F or N is selected in "How to Order" since it is included in the product.)

| Part no. | Contents | Applicable model |
|---|---|---|
| **HRS-EP018** | NPT thread conversion fitting set | **HRSH090-A-40** |
| **HRS-EP019** | G thread conversion fitting set | **HRSH090-A-20-S** |

| Part no. | Contents | Applicable model |
|---|---|---|
| **HRS-EP022** | NPT thread conversion fitting set | **HRSH090-W-40** |
| **HRS-EP023** | G thread conversion fitting set | **HRSH090-W-20-S** |

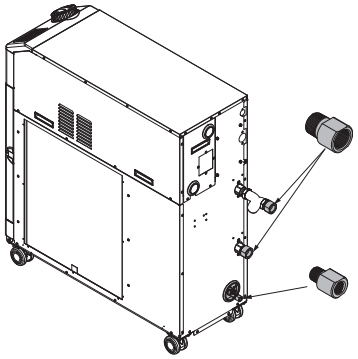


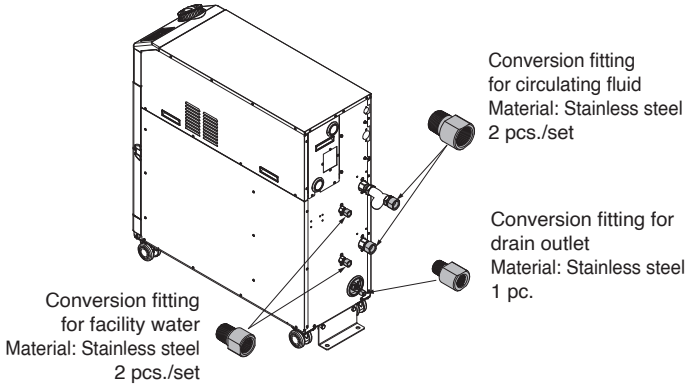


When option J (With automatic fluid fill function) is included, use the following part numbers.
· Automatic fluid fill port Rc 3/8 → NPT 3/8 or G 3/8
· Overflow port Rc 3/4 → NPT 3/4 or G 3/4
∗ The conversion fittings for circulating fluid outlet/return port, drain port, facility water inlet/outlet (for water-cooled refrigeration) are also included.

| Part no. | Contents | Applicable model |
|---|---|---|
| **HRS-EP020** | NPT thread conversion fitting set | **HRSH090-A-40-J** |
| **HRS-EP021** | G thread conversion fitting set | **HRSH090-A-20-JS** |

| Part no. | Contents | Applicable model |
|---|---|---|
| **HRS-EP024** | NPT thread conversion fitting set | **HRSH090-W-40-J** |
| **HRS-EP025** | G thread conversion fitting set | **HRSH090-W-20-JS** |

**HRSH100/150/200/250**

· Circulating fluid outlet, Circulating fluid return port, Overflow port Rc 1 → NPT 1 or G 1
· Drain port Rc 3/4 → NPT 3/4 or G 3/4
· Automatic fluid fill port Rc 1/2 → NPT 1/2 or G 1/2
· Facility water inlet, Facility water outlet Rc 1 → NPT 1 or G 1 (for HRS-EP015 or HRS-EP016)
(It is not necessary to purchase this when pipe thread type F or N is selected in "How to Order" since it is included in the product.)

| Part no. | Contents | Applicable model |
|---|---|---|
| **HRS-EP013** | NPT thread conversion fitting set | **HRSH100-A-20-□S**<br>**HRSH100-A-40-□**<br>**HRSH150-A-20-□S**<br>**HRSH150-A-40-□**<br>**HRSH200-A-20-□S**<br>**HRSH200-A-40-□**<br>**HRSH250-A-20-□S**<br>**HRSH250-A-40-□**<br>**HRSH300-A-20-□S**<br>**HRSH300-A-40-□** |
| **HRS-EP014** | G thread conversion fitting set | |

| Part no. | Contents | Applicable model |
|---|---|---|
| **HRS-EP015** | NPT thread conversion fitting set | **HRSH100-W-20-□S**<br>**HRSH100-W-40-□**<br>**HRSH150-W-20-□S**<br>**HRSH150-W-40-□**<br>**HRSH200-W-20-□S**<br>**HRSH200-W-40-□**<br>**HRSH250-W-20-□S**<br>**HRSH250-W-40-□** |
| **HES-EP016** | G thread conversion fitting set | |

**HRS-EP013, HRS-EP014**

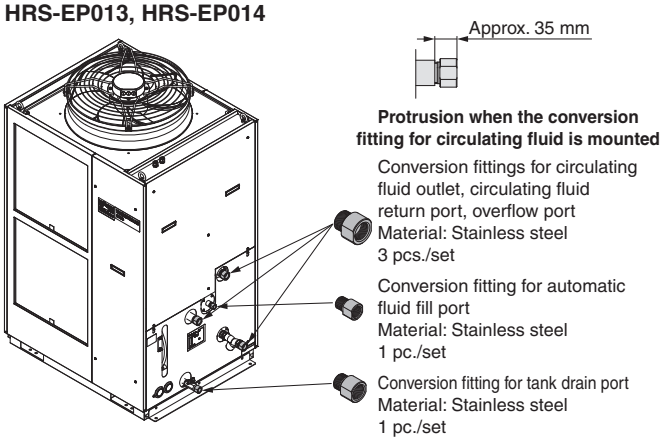


**HRS-EP015, HRS-EP016**

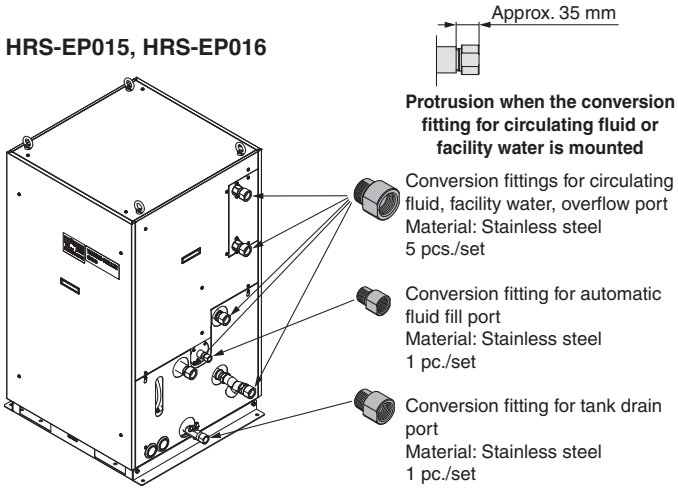

## ② By-pass Piping Set

When the circulating fluid goes below the minimum operating flow rate (as shown below), cooling capacity will be reduced and the temperature stability will be badly affected. Use the by-pass piping set to ensure a circulating fluid flow rate of the minimum operating flow rate or more.

**Bypass Piping Set**

| Part no. | Applicable model | Minimum operating flow rate [l/min] |
|---|---|---|
| HRS-BP005 | HRSH090-□□-□ | 20 |
| | HRSH100-□□-20-S<br>HRSH100-□□-40 | |
| | HRSH150-□□-20-S<br>HRSH150-□□-40<br>HRSH200-□□-20-S<br>HRSH200-□□-40<br>HRSH250-W□-20-S<br>HRSH250-W□-40 | 25 |
| | HRSH250-A□-20-S<br>HRSH250-A□-40<br>HRSH300-A□-20-S<br>HRSH300-A□-40 | 40 |

**Bypass Piping Set (Stainless Steel)**

| Part no. | Applicable model | Minimum operating flow rate [L/min] |
|---|---|---|
| HRS-BP011 | HRSH090-□□-□<br>HRSH100-□□-□ | 20 |
| | HRSH150-□□-□<br>HRSH200-□□-□<br>HRSH250-W□-□ | 25 |
| | HRSH250-A□-□<br>HRSH300-A□-□ | 40 |

∗ When selecting option "M," the HRS-BP011 is recommended.

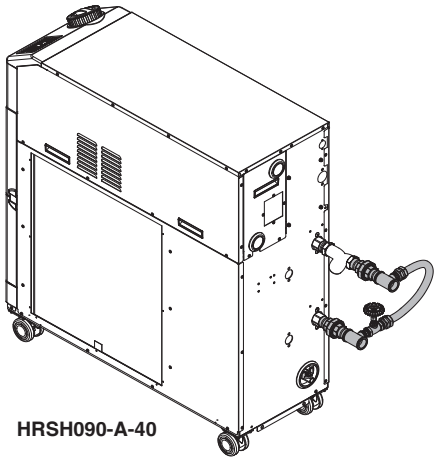

HRSH090-A-40

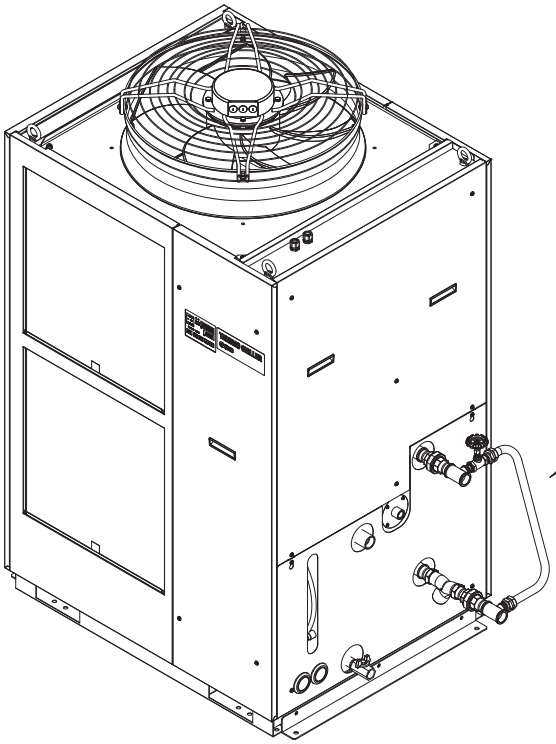

(The figure shows the HRSH250-A-20S)

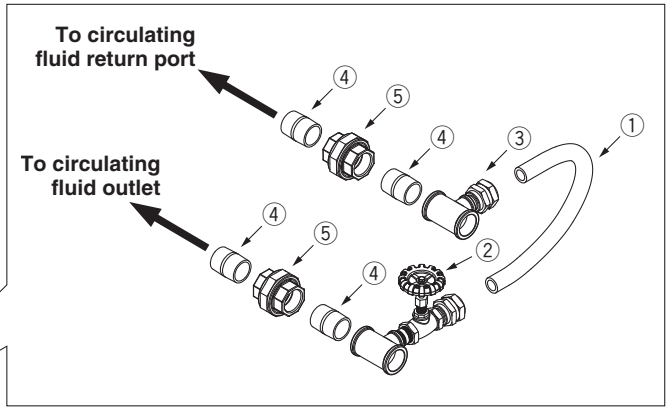


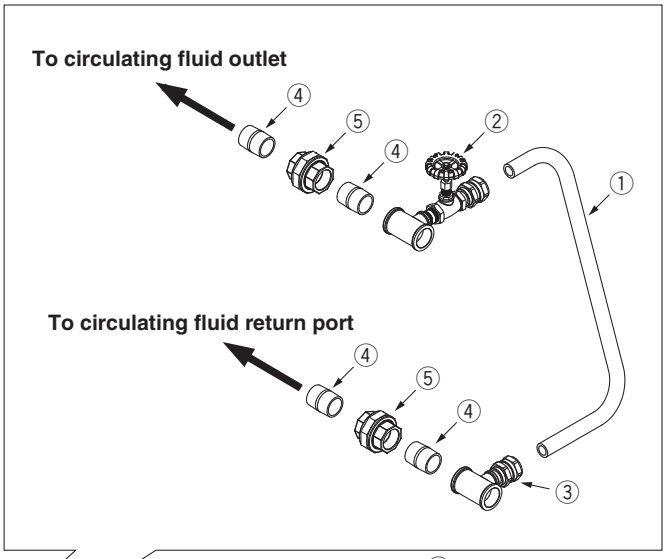


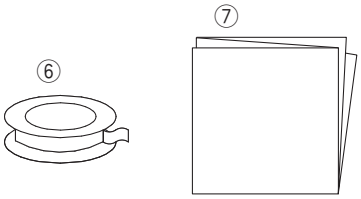


**Parts List**

| No. | Description | Fluid contact material | | Qty. |
|---|---|---|---|---|
| | | HRS-BP005 | HRS-BP011 | |
| ① | Hose (I.D.: 15 mm) | PVC | PVC | 1 (Approx. 700 mm) |
| ② | Outlet piping assembly (With globe valve) | Stainless steel, Brass, Bronze | Stainless steel | 1 |
| ③ | Return piping assembly | Stainless steel, Brass | Stainless steel | 1 |
| ④ | Nipple (Size: 1 inch) | Stainless steel | Stainless steel | 4 |
| ⑤ | Union (Size: 1 inch) | Stainless steel | Stainless steel | 2 |
| ⑥ | Sealant tape | PTFE | PTFE | 1 |
| ⑦ | Operation Manual | — | — | 1 |

## ③ Caster Adjuster-foot Kit

This is a set of unfixed casters and adjuster feet stop.
When installed by user, it is necessary to lift the thermo-chiller by a forklift or sling work.
Carefully read the procedure manual included with this kit before performing the installation.

| Part no. | Applicable model |
|---|---|
| **HRS-KS001** | **HRSH250-A□-□**<br>**HRSH300-A□-□** |
| **HRS-KS002** | **HRSH100-A□-□**<br>**HRSH150-A□-□**<br>**HRSH200-A□-□**<br>**HRSH100-W□-□**<br>**HRSH150-W□-□**<br>**HRSH200-W□-□**<br>**HRSH250-W□-□** |

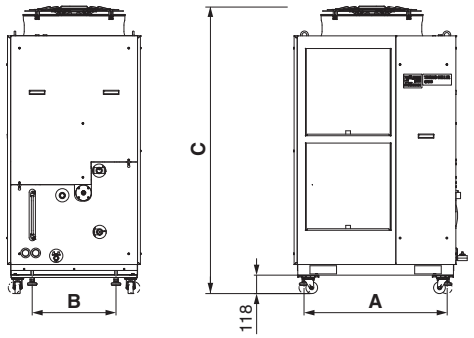


**Fig. 1 Mounting view**

### Parts List

| Description |
|---|
| Procedure manual |
| Caster adjuster-foot bracket (2 pcs.) |
| Fixing bolt (M8) (8 pcs.) |

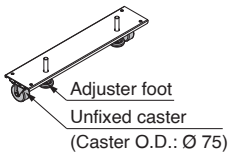


**Fig. 2 Caster adjuster-foot bracket (2 pcs.)**

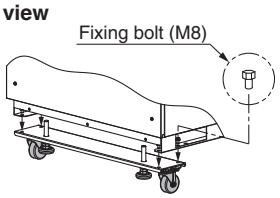


**Fig. 3 Fixing bolt (8 pcs.)**

## ④ Electric Conductivity Control Set

The set indicates and controls the electric conductivity of the circulating fluid. Refer to the Operation Manual for details.

| Part no. | Applicable model |
|---|---|
| **HRS-DI007** | **HRSH090-□□-□** |
| **HRS-DI006** | **HRSH100-□□-□**<br>**HRSH150-□□-□**<br>**HRSH200-□□-□**<br>**HRSH250-□□-□**<br>**HRSH300-□□-□** |

| | |
|---|---|
| Measurement range of electric conductivity | 2.0 to 48.0 μS/cm |
| Set range of electric conductivity target | 5.0 to 45.0 μS/cm |
| Set range of electric conductivity hysteresis | 2.0 to 10.0 μS/cm |
| Operating temperature range (Circulating fluid temperature) | 5 to 60 °C |
| Power consumption | 400 mA or less |
| Installation environment | Indoors |

### Parts List

| No. | Description | No. | Description |
|---|---|---|---|
| ① | DI filter vessel (resin) | ⑥ | Mounting screw (4 pcs.) |
| ② | Mounting bracket | ⑦ | DI control piping assembly |
| ③ | DI filter inlet tube | ⑧ | DI sensor assembly |
| ④ | DI filter outlet tube | ⑨ | Nipple (2 pcs.) |
| ⑤ | Tapping screw (4 pcs.) | ⑩ | DI filter cartridge (Part no.: HRS-DF001) |

**HRS-DI007**

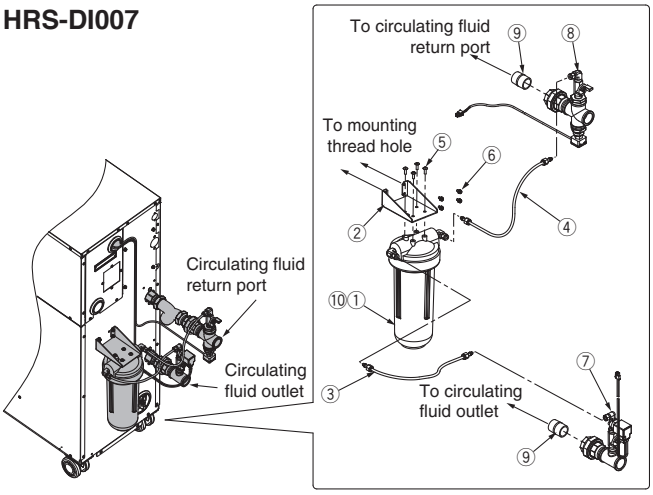


**HRS-DI006**

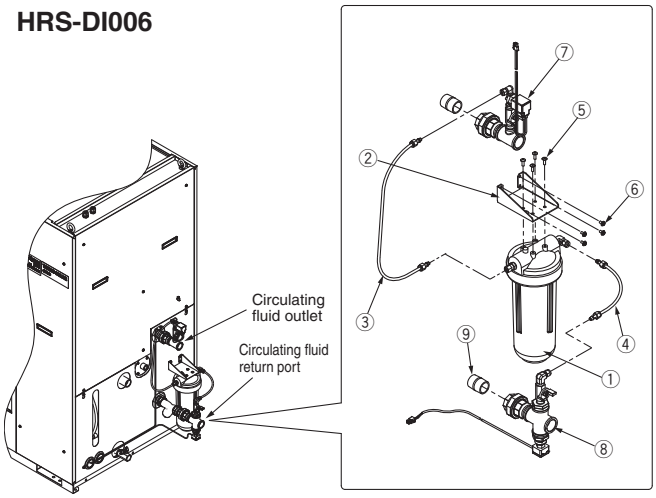

## ⑤ Particle Filter Set

Removes foreign matter in the circulating fluid. This set cannot be directly connected to the thermo-chiller. Install it in the user's piping system. Refer to the Operation Manual for details.

### Particle Filter Set

**HRS−PF005−H**

**Accessory**

| Symbol | Accessory |
|---|---|
| — | None |
| H | With handle |

| | |
|---|---|
| Fluid | Tap water |
| Max. operating pressure | 0.65 MPa |
| Operating temperature range | 5 to 35 °C |
| Nominal filtration accuracy | 5 μm |
| Installation environment | Indoors |

### Parts List

| No. | Description | Material | Q'ty | Note |
|---|---|---|---|---|
| ① | Body | PC, PP | 1 | — |
| ② | Element | PP | 1 | — |
| ③ | Extension piece | Stainless steel | 2 | Conversion from NPT to Rc |
| ④ | Handle | — | 1 | When -H is selected |
| ⑤ | Sealant tape | PTFE | 1 | — |

### Replacement Element

**HRS−PF006**

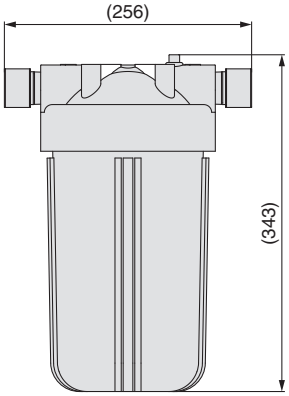


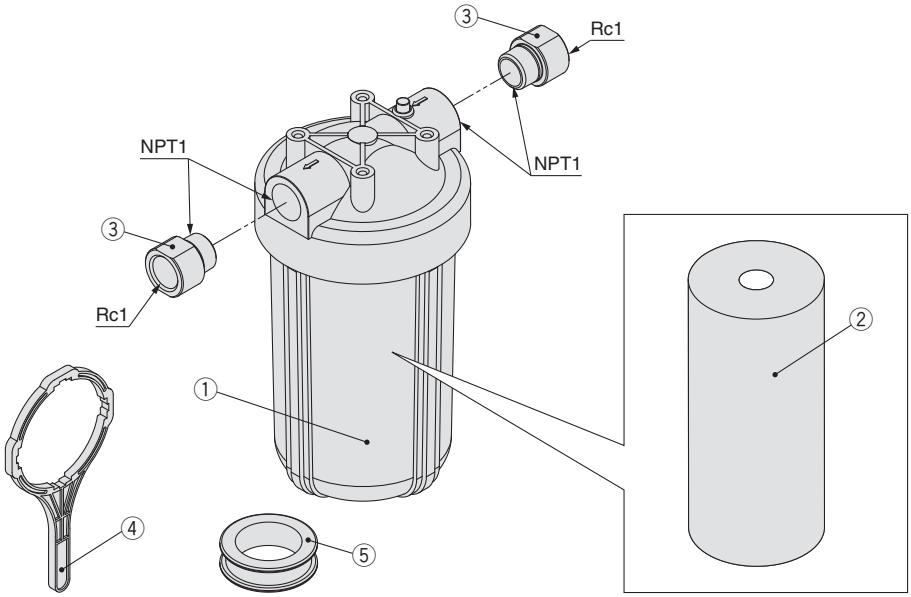


## ⑥ Filter for Circulating Fluid Fill Port

Prevents foreign matter from entering the tank when supplying the circulating fluid. Can be used just by fitting into the circulating fluid fill port.

| Part no. | Applicable model |
|---|---|
| **HRS-PF007** | **HRSH090-□□-□** |

| | |
|---|---|
| Material | Stainless steel 304<br>Stainless steel 316 |
| Mesh size | 200 |

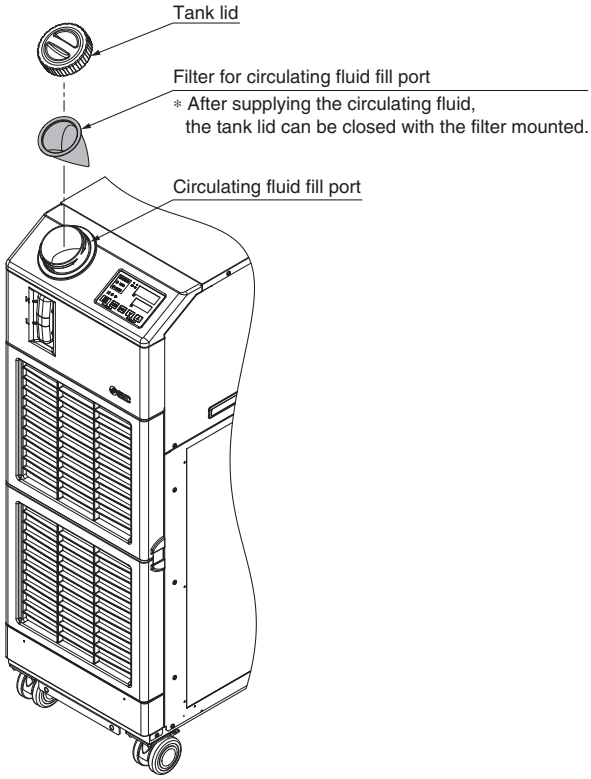

## ⑦ Snow Protection Hood

A stainless-steel hood, for air cooled thermo-chillers, that protects the fan and the chiller from snow (not applicable to size HRSH090).
Four types of ventilation direction can be selected depending on the mounting direction of the hood.

| Part no. | Applicable model |
|---|---|
| **HRS-BK004** | **HRSH100-A□-20-□S**<br>**HRSH100-A□-40-□**<br>**HRSH150-A□-20-□S**<br>**HRSH150-A□-40-□**<br>**HRSH200-A□-20-□S**<br>**HRSH200-A□-40-□** |
| **HRS-BK003** | **HRSH250-A□-20-□S**<br>**HRSH250-A□-40-□**<br>**HRSH300-A□-20-□S**<br>**HRSH300-A□-40-□** |

**Parts List**

| No. | Description | Q'ty |
|---|---|---|
| ① | Snow protection hood base | 1 |
| ② | Snow protection hood A | 1 |
| ③ | Snow protection hood B | 2 |
| ④ | Assembly/Mounting screw | 20 |

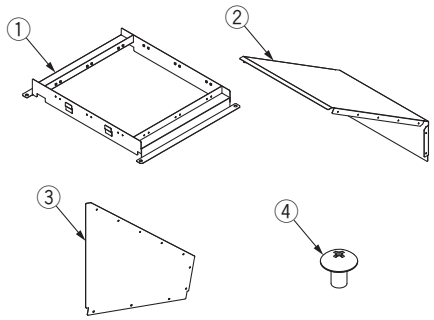


### Dimensions

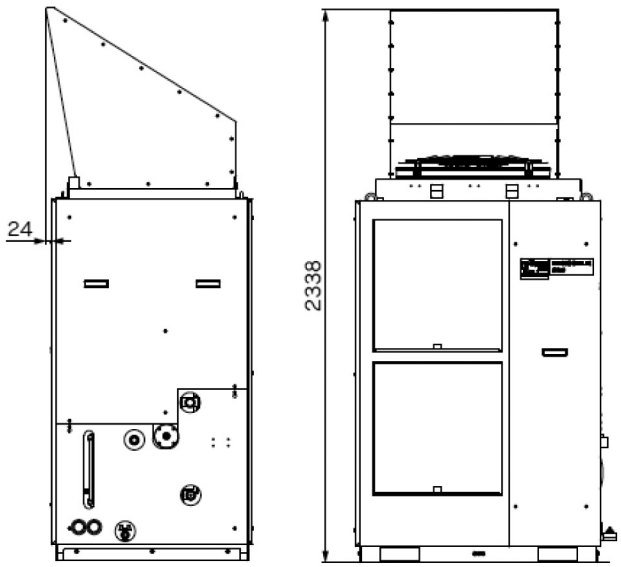


**HRS-BK003**

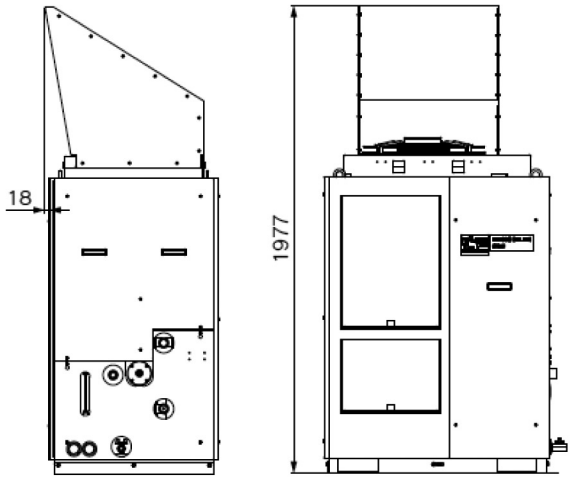


**HRS-BK004**

### Mounting diection

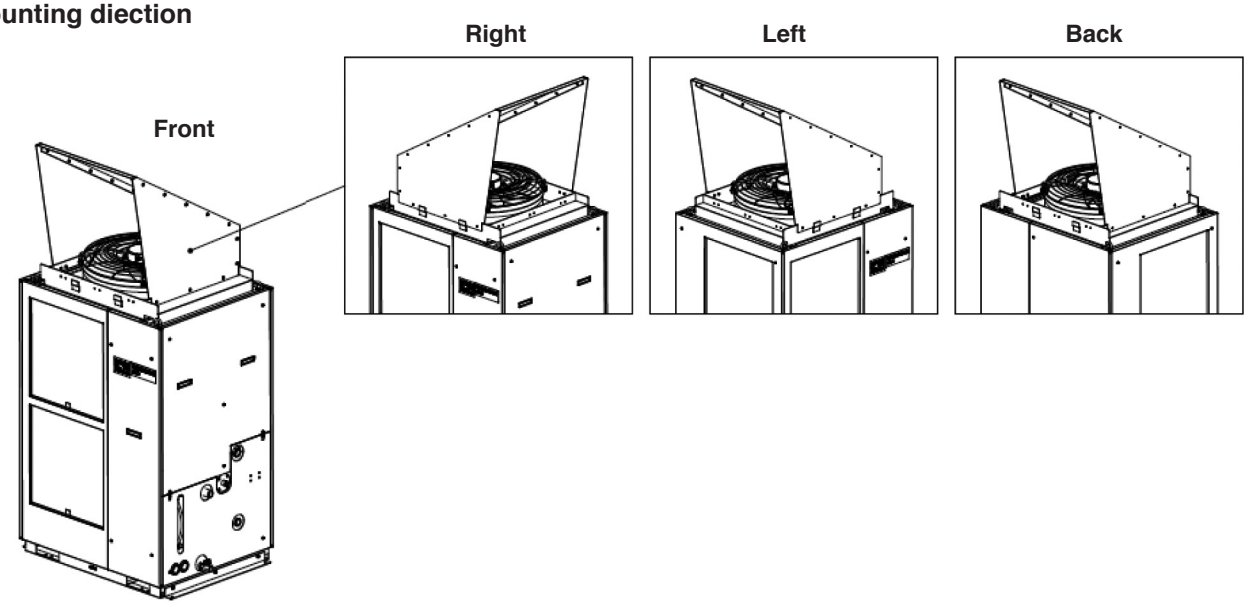

## ⑧ Drain Pan Set (With Water Leakage Sensor)

Drain pan for the thermo-chiller. Liquid leakage from the thermo-chiller can be detected by mounting the attached water leakage sensor. Align the drain pan with the hole in the bottom of the thermo-chiller for installation.

| Part no. | Applicable model |
|---|---|
| **HRS-WL003** | **HRSH090-□□-20-S**<br>**HRSH090-□□-40** |

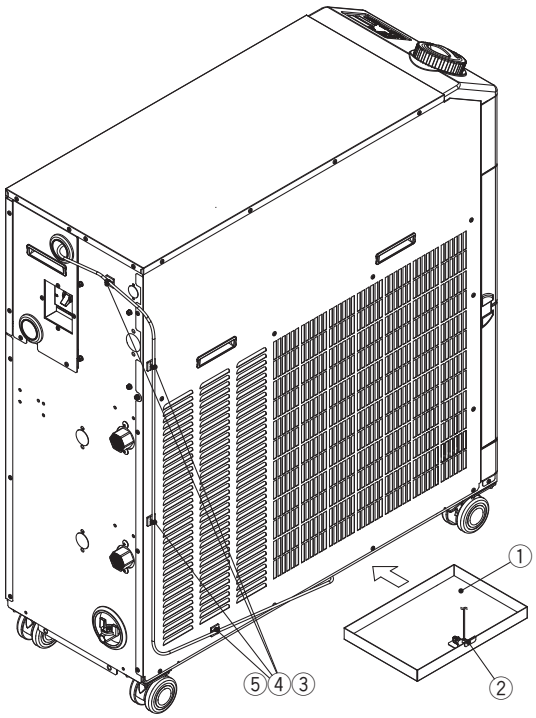


**Parts List**

| No. | Description |
|---|---|
| ① | Drain pan |
| ② | Water leakage sensor |
| ③ | Extension cable |
| ④ | Binding band (4 pcs.) |
| ⑤ | Cable fixture (4 pcs.) |

# Cooling Capacity Calculation

## Required Cooling Capacity Calculation

### Example 1: When the heat generation amount in the user's equipment is known.

**The heat generation amount can be determined based on the power consumption or output of the heat generating area — i.e. the area requiring cooling — within the user's equipment.***

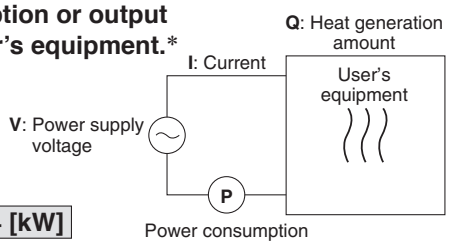


① **Derive the heat generation amount from the power consumption.**

Power consumption **P**: 20 [kW]

**Q = P = 20 [kW]**

Cooling capacity = Considering a safety factor of 20 %, **20 [kW] x 1.2 = 24 [kW]**

② **Derive the heat generation amount from the power supply output.**

Power supply output **VI**: 20 [kVA]

**Q = P = V x I x Power factor**

In this example, using a power factor of 0.85:

**= 20 [kVA] x 0.85 = 17 [kW]**

Cooling capacity = Considering a safety factor of 20 %,

**17 [kW] x 1.2 = 20.4 [kW]**

③ **Derive the heat generation amount from the output.**

Output (shaft power etc.) **W**: 13 [kW]

$$Q = P = \frac{W}{\text{Efficiency}}$$

In this example, using an efficiency of 0.7:

$$= \frac{13}{0.7} = 18.6\ [\text{kW}]$$

Cooling capacity = Considering a safety factor of 20 %,

**18.6 [kW] x 1.2 = 22.3 [kW]**

* The above examples calculate the heat generation amount based on the power consumption.
The actual heat generation amount may differ due to the structure of the user's equipment.
Be sure to check it carefully.

### Example 2: When the heat generation amount in the user's equipment is not known.

**Obtain the temperature difference between inlet and outlet by circulating the circulating fluid inside the user's equipment.**

| | |
|---|---|
| Heat generation amount by user's equipment **Q** | : Unknown [W] ([J/s]) |
| Circulating fluid | : Tap water* |
| Circulating fluid mass flow rate **qm** | : (= ρ x **qv** ÷ 60) [kg/s] |
| Circulating fluid density ρ | : 1 [kg/L] |
| Circulating fluid (volume) flow rate **qv** | : 70 [l/min] |
| Circulating fluid specific heat **C** | : 4.186 x $10^3$ [J/(kg·K)] |
| Circulating fluid outlet temperature $T_1$ | : 293 [K] (20 [°C]) |
| Circulating fluid return temperature $T_2$ | : 297 [K] (24 [°C]) |
| Circulating fluid temperature difference ΔT | : 4 [K] (= $T_2 - T_1$) |
| Conversion factor: minutes to seconds (SI units) | : 60 [s/min] |

* Refer to page 42 for the typical physical property value of tap water or other circulating fluids.

$$Q = qm \times C \times (T_2 - T_1)$$

$$= \frac{\rho \times qv \times C \times \Delta T}{60} = \frac{1 \times 70 \times 4.186 \times 10^3 \times 4.0}{60}$$

$$= 19535\ [\text{J/s}] \approx 19535\ [\text{W}] = 19.5\ [\text{kW}]$$

Cooling capacity = Considering a safety factor of 20 %,

**19.5 [kW] x 1.2 = 23.4 [kW]**

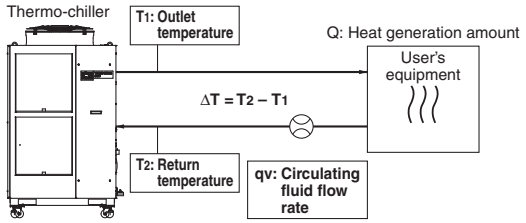


**HRSH250-A**

#### Example of conventional measurement units (Reference)

| | |
|---|---|
| Heat generation amount by user's equipment **Q** | : Unknown [cal/h] → [W] |
| Circulating fluid | : Tap water* |
| Circulating fluid weight flow rate **qm** | : (= ρ x **qv** x 60) [kgf/h] |
| Circulating fluid weight volume ratio γ | : 1 [kgf/L] |
| Circulating fluid (volume) flow rate **qv** | : 70 [l/min] |
| Circulating fluid specific heat **C** | : 1.0 x $10^3$ [cal/(kgf·°C)] |
| Circulating fluid outlet temperature $T_1$ | : 20 [°C] |
| Circulating fluid return temperature $T_2$ | : 24 [°C] |
| Circulating fluid temperature difference ΔT | : 4 [°C] (= $T_2 - T_1$) |
| Conversion factor: hours to minutes | : 60 [min/h] |
| Conversion factor: kcal/h to kW | : 860 [(cal/h)/W] |

$$Q = \frac{qm \times C \times (T_2 - T_1)}{860}$$

$$= \frac{\gamma \times qv \times 60 \times C \times \Delta T}{860}$$

$$= \frac{1 \times 70 \times 60 \times 1.0 \times 10^3 \times 4.0}{860}$$

$$= \frac{16800000\ [\text{cal/h}]}{860}$$

$$\approx 19534\ [\text{W}] = 19.5\ [\text{kW}]$$

Cooling capacity = Considering a safety factor of 20 %,

**19.5 [kW] x 1.2 = 23.4 [kW]**

## Required Cooling Capacity Calculation

**Example 3: When there is no heat generation, and when cooling the object below a certain temperature and period of time.**

| | |
|---|---|
| Heat quantity by cooled substance (per unit time) **Q** | : Unknown [W] ([J/s]) |
| Cooled substance | : Water |
| Cooled substance mass **m** | : (= ρ x **V**) [kg] |
| Cooled substance density ρ | : 1 [kg/L] |
| Cooled substance total volume **V** | : 300 [L] |
| Cooled substance specific heat **C** | : 4.186 x $10^3$ [J/(kg·K)] |
| Cooled substance temperature when cooling begins $T_0$ | : 305 [K] (32 [°C]) |
| Cooled substance temperature after t hour $T_t$ | : 293 [K] (20 [°C]) |
| Cooling temperature difference ΔT | : 12 [K] (= $T_0 - T_t$) |
| Cooling time Δt | : 900 [s] (= 15 [min]) |

∗ Refer to the following for the typical physical property values by circulating fluid.

$$Q = \frac{m \times C \times (T_t - T_0)}{\Delta t} = \frac{\rho \times V \times C \times \Delta T}{\Delta t}$$

$$= \frac{1 \times 300 \times 4.186 \times 10^3 \times 12}{900} = 16744\ [J/s] \approx 16.7\ [kW]$$

Cooling capacity = Considering a safety factor of 20 %,

**16.7 [kW] x 1.2 = 20 [kW]**

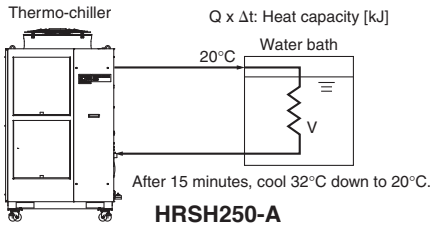


**HRSH250-A**

**Example of conventional measurement units (Reference)**

| | |
|---|---|
| Heat quantity by cooled substance (per unit time) **Q** | : Unknown [cal/h] → [W] |
| Cooled substance | : Water |
| Cooled substance weight **m** | : (= ρ x **V**) [kgf] |
| Cooled substance weight volume ratio γ | : 1 [kgf/L] |
| Cooled substance total volume **V** | : 300 [L] |
| Cooled substance specific heat **C** | : 1.0 x $10^3$ [cal/(kgf·°C)] |
| Cooled substance temperature when cooling begins $T_0$ | : 32 [°C] |
| Cooled substance temperature after t hour $T_t$ | : 20 [°C] |
| Cooling temperature difference ΔT | : 12 [°C] (= $T_0 - T_t$) |
| Cooling time Δt | : 15 [min] |
| Conversion factor: hours to minutes | : 60 [min/h] |
| Conversion factor: kcal/h to kW | : 860 [(cal/h)/W] |

$$Q = \frac{m \times C \times (T_t - T_0)}{\Delta t \times 860} = \frac{\gamma \times V \times 60 \times C \times \Delta T}{\Delta t \times 860}$$

$$= \frac{1 \times 300 \times 60 \times 1.0 \times 10^3 \times 12}{15 \times 860}$$

$$\approx 16744\ [W] = 16.7\ [kW]$$

Cooling capacity = Considering a safety factor of 20 %,

**16.7 [kW] x 1.2 = 20 [kW]**

Note) This is the calculated value by changing the fluid temperature only.
Thus, it varies substantially depending on the water bath or piping shape.

## Precautions on Cooling Capacity Calculation

### 1. Heating capacity

When the circulating fluid temperature is set above room temperature, it needs to be heated by the thermo-chiller. The heating capacity depends on the circulating fluid temperature. Consider the radiation rate and heat capacity of the user's equipment and check beforehand if the required heating capacity is provided.

### 2. Pump capacity

**<Circulating fluid flow rate>**

Circulating fluid flow rate varies depending on the circulating fluid discharge pressure. Consider the installation height difference between the thermo-chiller and the user's equipment, and the piping resistance such as circulating fluid pipings, or piping size, or piping curves in the machine. Check beforehand if the required flow is achieved, using the pump capacity curves.

**<Circulating fluid discharge pressure>**

Circulating fluid discharge pressure has the possibility to increase up to the maximum pressure in the pump capacity curves.
Check beforehand if the circulating fluid pipings or circulating fluid circuit of the user's equipment are fully durable against this pressure.

## Circulating Fluid Typical Physical Property Values

**1. This catalogue uses the following values for density and specific heat in calculating the required cooling capacity.**

Density ρ: 1 [kg/L] (or, using conventional unit system, weight volume ratio γ = 1 [kgf/L] )
Specific heat **C**: 4.19 x $10^3$ [J/(kg·K)] (or, using conventional unit system, 1 x $10^3$ [cal/(kgf·°C)])

**2. Values for density and specific heat change slightly according to temperature shown below. Use this as a reference.**

**Water**

| Physical property value / Temperature | Density ρ [kg/L] | Specific heat C [J/(kg·K)] | Conventional unit system | |
|---|---|---|---|---|
| | | | Weight volume ratio γ [kgf/L] | Specific heat C [cal/(kgf·°C)] |
| **5 °C** | 1.00 | 4.2 x $10^3$ | 1.00 | 1 x $10^3$ |
| **10 °C** | 1.00 | 4.19 x $10^3$ | 1.00 | 1 x $10^3$ |
| **15 °C** | 1.00 | 4.19 x $10^3$ | 1.00 | 1 x $10^3$ |
| **20 °C** | 1.00 | 4.18 x $10^3$ | 1.00 | 1 x $10^3$ |
| **25 °C** | 1.00 | 4.18 x $10^3$ | 1.00 | 1 x $10^3$ |
| **30 °C** | 1.00 | 4.18 x $10^3$ | 1.00 | 1 x $10^3$ |
| **35 °C** | 0.99 | 4.18 x $10^3$ | 0.99 | 1 x $10^3$ |
| **40 °C** | 0.99 | 4.18 x $10^3$ | 0.99 | 1 x $10^3$ |

**15 % Ethylene Glycol Aqueous Solution**

| Physical property value / Temperature | Density ρ [kg/L] | Specific heat C [J/(kg·K)] | Conventional unit system | |
|---|---|---|---|---|
| | | | Weight volume ratio γ [kgf/L] | Specific heat C [cal/(kgf·°C)] |
| **5 °C** | 1.02 | 3.91 x $10^3$ | 1.02 | 0.93 x $10^3$ |
| **10 °C** | 1.02 | 3.91 x $10^3$ | 1.02 | 0.93 x $10^3$ |
| **15 °C** | 1.02 | 3.91 x $10^3$ | 1.02 | 0.93 x $10^3$ |
| **20 °C** | 1.01 | 3.91 x $10^3$ | 1.01 | 0.93 x $10^3$ |
| **25 °C** | 1.01 | 3.91 x $10^3$ | 1.01 | 0.93 x $10^3$ |
| **30 °C** | 1.01 | 3.91 x $10^3$ | 1.01 | 0.94 x $10^3$ |
| **35 °C** | 1.01 | 3.91 x $10^3$ | 1.01 | 0.94 x $10^3$ |
| **40 °C** | 1.01 | 3.92 x $10^3$ | 1.01 | 0.94 x $10^3$ |

Note) The above shown are reference values. Contact circulating fluid supplier for details.

# Series HRSH
# Specific Product Precautions 1

**Be sure to read this before handling. Refer to back cover for Safety Instructions. For Temperature Control Equipment Precautions, refer to "Handling Precautions for SMC Products" and the Operation Manual on SMC website, http://www.smc.eu**

## Design

### ⚠ Warning

**1. This catalogue shows the specifications of a single unit.**

1) Confirm the specifications of the single unit (contents of this catalogue) and thoroughly consider the adaptability between the user's system and this unit.
2) Although the protection circuit as a single unit is installed, prepare a drain pan, water leakage sensor, discharge air facility, and emergency stop equipment, depending on the user's operating condition. Also, the user is requested to carry out the safety design for the whole system.

**2. When attempting to cool areas that are open to the atmosphere (tanks, pipes), plan your piping system accordingly.**

When cooling open-air external tanks, arrange the piping so that there are coil pipes for cooling inside the tanks, and to carry back the entire flow volume of circulating fluid that is released.

**3. Use non-corrosive material for fluid contact of circulating fluid and facility water.**

Using corrosive materials such as aluminum or iron for fluid contact parts such as piping may cause clogging or leakage in the circulating fluid and facility water circuits. Provide protection against corrosion when you use the product.

## Selection

### ⚠ Warning

**Model selection**

For selecting a model of thermo-chiller, it is required to know the heat generation amount of the user's equipment. Obtain the heat generation amount, referring to "Cooling Capacity Calculation" on pages 41 and 42 before selecting a model.

## Handling

### ⚠ Warning

**Thoroughly read the Operation Manual.**

Read the Operation Manual completely before operation, and keep this manual available whenever necessary.

## Operating Environment/Storage Environment

### ⚠ Warning

**1. Do not use in the following environment as it will lead to a breakdown.**

1) Outdoors (for HRSH090).
2) In locations where water vapour, salt water, and oil may splash on the product.
3) In locations where there are dust and particles.
4) In locations where corrosive gases, organic solvents, chemical fluids, or flammable gases are present. (This product is not explosion proof.)
5) In locations where the ambient temperature exceeds the limits as mentioned below.
   During transportation/storage: -15 °C to 50 °C (But as long as water or circulating fluid are not left inside the pipings)
   During operation of air cooling type: -20 °C to 45 °C
   During operation of water cooling type: 2 °C to 45 °C
   (However, use a 15 % ethylene glycol aqueous solution if operating in a place where the ambient temperature is from -5 to 10 °C or circulating fluid temperature is 10 °C or less. Use a 40 % ethylene glycol aqueous solution if operating in a place where the ambient temperature is from -20 to 5 °C.)
6) In locations where condensation may occur.
7) In locations which receive direct sunlight or radiated heat.
8) In locations where there is a heat source nearby and the ventilation is poor.
9) In locations where temperature substantially changes.
10) In locations where strong magnetic noise occurs.
    (In locations where strong electric fields, strong magnetic fields and surge voltage occur.)
11) In locations where static electricity occurs, or conditions which make the product discharge static electricity.
12) In locations where high frequency occurs.
13) In locations where damage is likely to occur due to lightning.
14) In locations at altitude of 3000 m or higher (Except during storage and transportation)
    ∗ For altitude of 1000 m or higher
    Because of lower air density, the heat radiation efficiencies of the devices in the product will be lower in the location at altitude of 1000 m or higher. Therefore, the maximum ambient temperature to use and the cooling capacity will lower according to the descriptions in the table below.
    Select the thermo-chiller considering the descriptions.
    ① Upper limit of ambient temperature: Use the product in ambient temperature of the described value or lower at each altitude.
    ② Cooling capacity coefficient: The product's cooling capacity will lower to one that multiplied by the described value at each altitude.

| Altitude [m] | ① Upper limit of ambient temperature [°C] | ② Cooling capacity coefficient |
|---|---|---|
| Less than 1000 m | 45 | 1.00 |
| Less than 1500 m | 42 | 0.85 |
| Less than 2000 m | 38 | 0.80 |
| Less than 2500 m | 35 | 0.75 |
| Less than 3000 m | 32 | 0.70 |

15) In locations where strong impacts or vibrations occur.
16) In locations where a massive force strong enough to deform the product is applied or a weight from a heavy object is applied.
17) In locations where there is not sufficient space for maintenance.
18) In locations where liquid that exceeds the conditions required for the degrees of protection IPX4 may splash on the product.
19) Bevelled place (for HRSH090).

**2. The product is not designed for clean room usage. It generates particles internally.**

# Series HRSH
# Specific Product Precautions 2

**Be sure to read this before handling. Refer to back cover for Safety Instructions. For Temperature Control Equipment Precautions, refer to "Handling Precautions for SMC Products" and the Operation Manual on SMC website, http://www.smc.eu**

## Transportation/Carriage/Movement

## ⚠ Warning

**1. This product is heavy. Pay attention to safety and position of the product when it is transported, carried and moved.**

**2. Read the Operation Manual carefully to move the product after unpacking.**

**3. This product will require an acceptance with the product not unloaded from the truck, and the user will need to unload the product by himself. Please prepare a forklift.**

The product will be delivered in the packaging shown below.

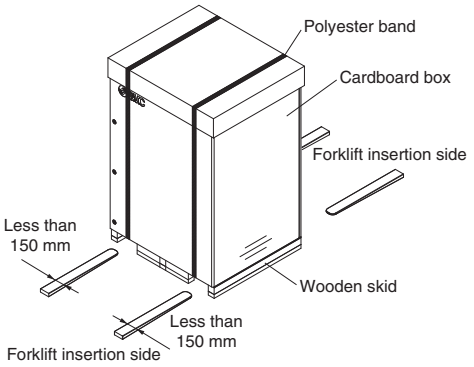


**<Weight and dimensions including packaging>**

| Model | Weight [kg] | Dimensions [mm] |
|---|---|---|
| HRSH090-A□-40 | 158 | Height 1290 x Width 470 x Depth 1180 |
| HRSH090-W□-40 | | |
| HRSH100-A□-□S | 221 | Height 1585 x Width 1185 x Depth 955 |
| HRSH150-A□-□S<br>HRSH200-A□-□S | 256 | |
| HRSH250-A□-□S | 330 | Height 1895 x Width 1230 x Depth 1040 |
| HRSH100-W□-□S | 185 | Height 1485 x Width 925 x Depth 955 |
| HRSH150-W□-□S<br>HRSH200-W□-□S<br>HRSH250-W□-□S | 215 | |
| HRSH100-A□-A□S | 233 | Height 1710 x Width 1185 x Depth 955 |
| HRSH150-A□-A□S | 268 | |
| HRSH200-A□-A□S | | |
| HRSH250-A□-A□S | 344 | Height 2020 x Width 1230 x Depth 1040 |
| HRSH300-A□-A□S | | |
| HRSH100-W□-A□S | 197 | Height 1610 x Width 925 x Depth 955 |
| HRSH150-W□-A□S | 227 | |
| HRSH200-W□-A□S | | |
| HRSH250-W□-A□S | | |

**2. Moving with forklift**

1) A licensed driver should drive the forklift.
2) The proper place to insert the tines of the forklift differs depending on the model of cooler. Insert the fork to the place specified on the label. The fork should reach through to the other side of the product.
3) Be careful not to bump the fork to the cover panel or piping ports.

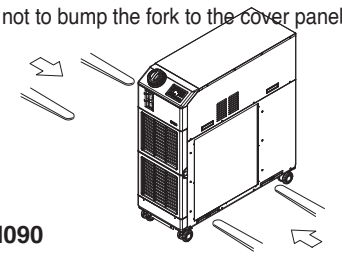

**HRSH090**

**3. Hanging transportation**

1) Crane manipulation and slinging work should be done by an eligible person.
2) Do not grip the piping on the right side or the handles of the panel.
3) When hanging by the eye bolts, be sure to use a 4-point hanging method. For the hanging angle, use caution regarding the position of the centre of gravity and hold it within 60°.

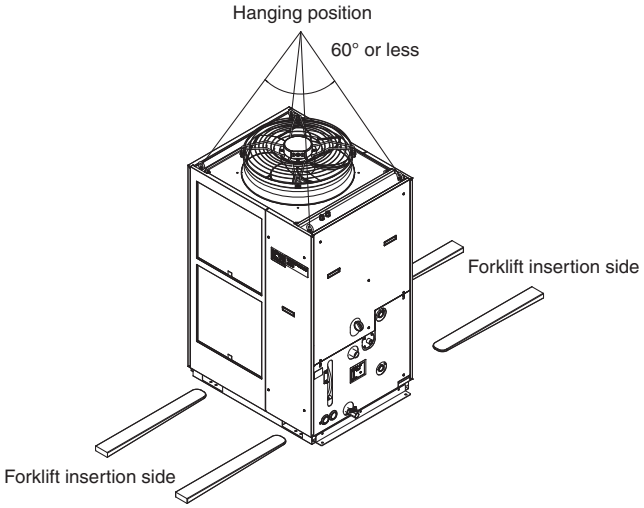


**HRSH250-A-20S**

**(When using optional accessories/Caster adjuster-foot kit HRS-KS001 or KS002)**

**4. Moving with casters**

1) This is a heavy product, so make sure not is lifted log at least two people to avoid falling.
2) Do not grip the piping port on the right side or the handles of the panel.
3) Do not pass over bumps, etc, with the casters.
4) When transporting using a forklift, be sure not to let it hit the casters or adjusters, and drive the fork all the way through until it comes out the other side.

## Mounting/Installation

## ⚠ Warning

**1. Do not use the HRSH090 outdoors.**

**2. Do not place heavy objects on top of this product, or step on it.**

The external panel can be deformed and danger can result.

## ⚠ Caution

**1. Install on a rigid floor which can withstand this product's weight.**

**2. Secure with bolts, anchor bolts, etc.**

# Series HRSH
# Specific Product Precautions 3

**Be sure to read this before handling. Refer to back cover for Safety Instructions. For Temperature Control Equipment Precautions, refer to "Handling Precautions for SMC Products" and the Operation Manual on SMC website, http://www.smc.eu**

## Mounting/Installation

## ⚠ Caution

**3. Refer to the Operation Manual for this product, and secure an installation space that is necessary for the maintenance and ventilation.**

### <Air-cooled refrigeration>

1. The air-cooled type product exhausts heat using the fan that is mounted to the product. If the product is operated with insufficient ventilation, ambient temperature may exceed 45 °C, and this will affect the performance and life of the product. To prevent this ensure that suitable ventilation is available (see below).
2. For installation indoors, ventilation ports and a ventilation fan should be equipped as needed.

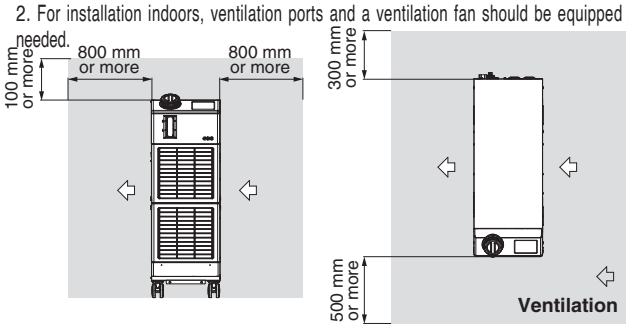


**HRSH090**

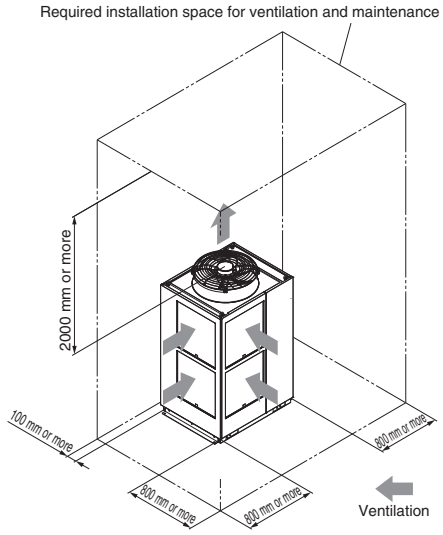


**HRSH250-A**

3. If it is impossible to exhaust heat from the installation area indoors, or when the installation area is conditioned, provide a duct for heat exhaustion to the air outlet port of this product for ventilation. Do not mount the inlet of the duct (flange) directly to the air vent of the product, and keep a space larger than the diameter of the duct. Additionally, consider the resistance of the duct when making the air vent port for the duct.

### <Heat radiation amount/Required ventilation rate>

| Model | Heat radiation amount [kW] | Required ventilation rate [m³/min] | |
|---|---|---|---|
| | | Differential temp. of 3 °C between inside and outside of installation area | Differential temp. of 6 °C between inside and outside of installation area |
| **HRSH090-A□-40** | Approx. 18 | 305 | 155 |
| **HRSH100-A□-□** | Approx. 18 | 305 | 155 |
| **HRSH150-A□-□** | Approx. 29 | 490 | 245 |
| **HRSH200-A□-□** | Approx. 35 | 590 | 295 |
| **HRSH250-A□-□** | Approx. 44 | 730 | 365 |
| **HRSH300-A□-□** | Approx. 45 | 760 | 380 |

### <Water-cooled refrigeration>

When installing the product, keep the space for maintenance as shown below.

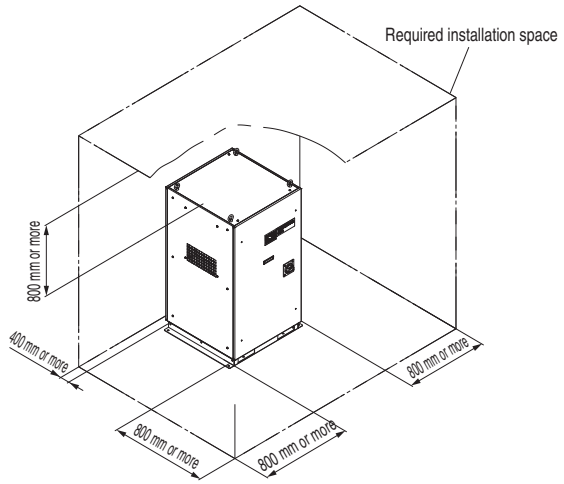


## Piping

## ⚠ Caution

**1. Regarding the circulating fluid and facility water pipings, consider carefully the suitability for temperature, circulating fluid and facility water.**

If the operating performance is not sufficient, the pipings may burst during operation. Using corrosive materials such as aluminium or iron for fluid contact parts such as piping may cause clogging or leakage in the circulating fluid and facility water circuits. Provide protection against corrosion when you use the product.

**2. Select the piping port size which can exceed the rated flow.**

For the rated flow, refer to the pump capacity table.

**3. When tightening at the drain port of this product, use a pipe wrench to clamp the connection ports.**

**4. Supply water pressure to the automatic fluid fill port of this product should be 0.2 to 0.5 MPa.**

This product has a built-in ball (float) tap. If you attach it to the faucet of a sink etc. it will automatically supply water to the rated fluid level of the tank (halfway between HIGH and LOW.) If the water supply pressure is too high, the pipes may burst during use. Proceed with caution.

**5. Ensure that piping is connected to the overflow port so that the circulating fluid can be exhausted to the drainage pit when the fluid level in the tank increases.**

**6. For the circulating fluid piping connection, install a drain pan and wastewater collection pit just in case the circulating fluid may leak.**

**7. This product series are constant-temperature fluid circulating machines with built-in tanks.**

Do not install equipment on your system side such as pumps that forcibly return the circulating fluid to the unit. Also, if you attach an external tank that is open to the air, it may become impossible to circulate the circulating fluid. Proceed with caution.

# Series HRSH
# Specific Product Precautions 4

**Be sure to read this before handling. Refer to back cover for Safety Instructions. For Temperature Control Equipment Precautions, refer to "Handling Precautions for SMC Products" and the Operation Manual on SMC website, http://www.smc.eu**

## Electrical Wiring

### ⚠ Warning

**Grounding should never be connected to a water line, gas line or lightning rod.**

### ⚠ Caution

1. **Power supply and communication cables should be prepared by user.**
2. **Provide a stable power supply which is not affected by surge or distortion.**
   If the voltage increase ratio (dV/dt) at the zero cross should exceed 40 V/200 µsec., it may result in malfunction.

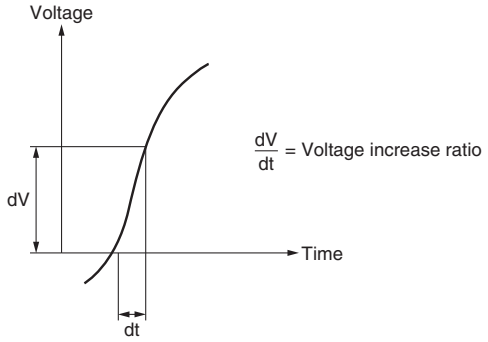


**<For 400 V>**

3. **This product is installed with a breaker with the following operating characteristics.**
   For the user's equipment (inlet side), use a breaker whose operating time is equal to or longer than the breaker of this product. If a breaker with shorter operating time is connected, the user's equipment could be cut off due to the inrush current of the motor of this product.

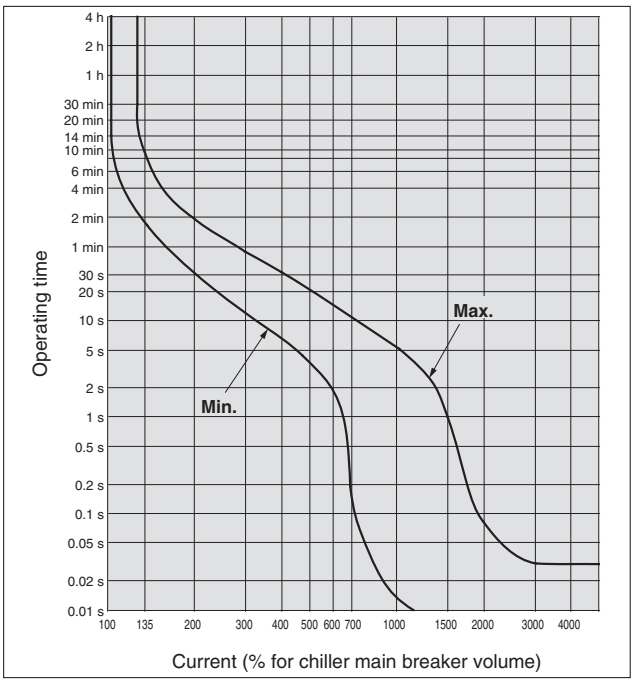


## Circulating Fluid

### ⚠ Caution

1. **Avoid oil or other foreign objects entering the circulating fluid.**
2. **When water is used as a circulating fluid, SMC recommends the water quality shown in the following table as reference.**
   - Including water used for dilution of ethylene glycol aqueous solutions.
   - In most areas, tap water can be used. However, if the tap water in the area is hard, there is a possibility of failure or performance decline due to limescale build-up. To soften the water and avoid problems, consider using water hardness filters.

**Tap Water (as Circulating Fluid) Quality Standards**

The Japan Refrigeration and Air Conditioning Industry Association
JRA GL-02-1994 "Cooling water system – Circulation type – Make-up water"

| | Item | Unit | Standard value | Influence | |
|---|---|---|---|---|---|
| | | | | Corrosion | Scale generation |
| Standard item | pH (at 25 °C) | — | 6.0 to 8.0 | ○ | ○ |
| | Electric conductivity (25 °C) | [µS/cm] | 100* to 300* | ○ | ○ |
| | Chloride ion ($Cl^-$) | [mg/L] | 50 or less | ○ | |
| | Sulfuric acid ion ($SO_4^{2-}$) | [mg/L] | 50 or less | ○ | |
| | Acid consumption amount (at pH4.8) | [mg/L] | 50 or less | | ○ |
| | Total hardness | [mg/L] | 70 or less | | ○ |
| | Calcium hardness ($CaCO_3$) | [mg/L] | 50 or less | | ○ |
| | Ionic state silica ($SiO_2$) | [mg/L] | 30 or less | | ○ |
| Reference item | Iron (Fe) | [mg/L] | 0.3 or less | ○ | ○ |
| | Copper (Cu) | [mg/L] | 0.1 or less | ○ | |
| | Sulfide ion ($S_2^-$) | [mg/L] | Should not be detected. | ○ | |
| | Ammonium ion ($NH_4^+$) | [mg/L] | 0.1 or less | ○ | |
| | Residual chlorine (Cl) | [mg/L] | 0.3 or less | ○ | |
| | Free carbon ($CO_2$) | [mg/L] | 4.0 or less | ○ | |

* In the case of [MΩ·cm], it will be 0.003 to 0.01.
- ○: Factors that have an effect on corrosion or scale generation.
- Even if the water quality standards are met, complete prevention of corrosion is not guaranteed.

3. **Use an ethylene glycol aqueous solution that does not contain additives such as preservatives.**
4. **When using ethylene glycol aqueous solution, maintain a maximum concentration of 40 %.**
   Overly high concentrations can cause a pump overload.
   Utilisation of ethylene glycol aqueous solution of 40 % might reduce cooling capacity at 20 %.
   Low concentrations, however, can lead to freezing when circulating fluid temperature is 10 °C or lower and cause the thermo-chiller to break down.
5. **When deionised water is used, the electric conductivity should be 1 µS/cm or higher (Electric resistivity: 1 MΩ·cm or lower).**

## Facility Water Supply

### ⚠ Warning

**<Water-cooled refrigeration>**

1. **The water-cooled refrigeration type thermo-chiller radiates heat to the facility water.**
   **Prepare the facility water system that satisfies the heat radiation and the facility water specifications below.**

**■ Required facility water system**
**<Heat radiation amount/Facility water specifications>**

| Model | Heat radiation [kW] | Facility water specifications |
|---|---|---|
| **HRSH090-W□-40** | Approx. 20 | Refer to "Facility water system" in the specifications on pages 16, 22 and 24. |
| **HRSH100-W□-□** | Approx. 20 | |
| **HRSH150-W□-□** | Approx. 27 | |
| **HRSH200-W□-□** | Approx. 34 | |
| **HRSH250-W□-□** | Approx. 40 | |

# Series HRSH
# Specific Product Precautions 5

**Be sure to read this before handling. Refer to back cover for Safety Instructions. For Temperature Control Equipment Precautions, refer to "Handling Precautions for SMC Products" and the Operation Manual on SMC website, http://www.smc.eu**

## Facility Water Supply

### ⚠ Warning

**2. When water is used as a circulating fluid, SMC recommends the water quality shown in the following table as reference.**

- In most areas, tap water can be used. However, if the tap water in the area is hard, there is a possibility of failure or performance decline due to limescale build-up. To soften the water and avoid problems, consider using water hardness filters.

**Tap Water (as Facility Water) Quality Standards**

The Japan Refrigeration and Air Conditioning Industry Association
JRA GL-02-1994 "Cooling water system – Circulation type – Make-up water"

| | Item | Unit | Standard value | Influence | |
|---|---|---|---|---|---|
| | | | | Corrosion | Scale generation |
| Standard item | pH (at 25 °C) | — | 6.5 to 8.2 | ○ | ○ |
| | Electric conductivity (25 °C) | [μS/cm] | 100* to 800* | ○ | ○ |
| | Chloride ion ($Cl^-$) | [mg/L] | 200 or less | ○ | |
| | Sulfuric acid ion ($SO_4^{2-}$) | [mg/L] | 200 or less | ○ | |
| | Acid consumption amount (at pH4.8) | [mg/L] | 100 or less | | ○ |
| | Total hardness | [mg/L] | 200 or less | | ○ |
| | Calcium hardness ($CaCO_3$) | [mg/L] | 150 or less | | ○ |
| | Ionic state silica ($SiO_2$) | [mg/L] | 50 or less | | ○ |
| Reference item | Iron (Fe) | [mg/L] | 1.0 or less | ○ | ○ |
| | Copper (Cu) | [mg/L] | 0.3 or less | ○ | |
| | Sulfide ion ($S_2^-$) | [mg/L] | Should not be detected. | ○ | |
| | Ammonium ion ($NH_4^+$) | [mg/L] | 1.0 or less | ○ | |
| | Residual chlorine (Cl) | [mg/L] | 0.3 or less | ○ | |
| | Free carbon ($CO_2$) | [mg/L] | 4.0 or less | ○ | |

∗ In the case of [MΩ·cm], it will be 0.001 to 0.01.
• ○: Factors that have an effect on corrosion or scale generation.
• Even if the water quality standards are met, complete prevention of corrosion is not guaranteed.

**3. Set the supply pressure between 0.3 to 0.5 MPa. Ensure a pressure difference at the facility water inlet/outlet of 0.3 MPa or more.**

If the supply pressure is high, it will cause water leakage. If the supply pressure and pressure difference at the facility water inlet/outlet is low, it will cause an insufficient flow rate of the facility water, and poor temperature control.

## Operation

### ⚠ Warning

**1. Confirmation before operation**

1) The fluid level of a tank should be within the specified range of "HIGH" and "LOW".
When exceeding the specified level, the circulating fluid will overflow.
2) Remove the air.
Conduct a trial operation, looking at the fluid level.
Since the fluid level will go down when the air is removed from the user's piping system, supply water once again when the fluid level is reduced. When there is no reduction in the fluid level, the job of removing the air is completed.
Pump can be operated independently.

**2. Confirmation during operation**

- Check the circulating fluid temperature.

The operating temperature range of the circulating fluid is between 5 and 35 °C. (5 to 40 °C for HRSH090)
When the amount of heat generated from the user's equipment is greater than the product's capability, the circulating fluid temperature may exceed this range. Use caution regarding this matter.

**3. Emergency stop method**

- When an abnormality is confirmed, stop the machine immediately. After stopping operation, disconnect the power supply from the user's equipment.

## Operation Restart Time

### ⚠ Caution

**Wait five minutes or more before restarting operation after it has been stopped. If the operation is restarted within five minutes, the protection circuit may activate and the operation may not start properly.**

## Protection Circuit

### ⚠ Caution

**If operating in the below conditions, the protection circuit will activate and an operation may not be performed or will stop.**

- Power supply voltage is not within the rated voltage range of ±10 %.
- In case the water level inside the tank is reduced abnormally.
- Circulating fluid temperature is too high.
- Compared to the cooling capacity, the heat generation amount of the user's equipment is too high.
- Ambient temperature is too high (check the ambient temperature in the specifications).
- Ventilation hole is clogged with dust or dirt.

## Maintenance

### ⚠ Caution

**<Periodical inspection every one month>**

**Clean the ventilation hole.**

If the dustproof filter of water-cooled type product becomes clogged with dust or debris, a decline in cooling performance can result.
In order to avoid deforming or damaging the dustproof filter, clean it with a long-haired brush or air gun.

**<Periodical inspection every three months>**

**Inspect the circulating fluid.**

1. When using tap water or deionized water
   - Replacement of circulating fluid
     Failure to replace the circulating fluid can lead to the development of bacteria or algae. Replace it regularly depending on your usage conditions.
   - Tank cleaning (same as the HRS series)
     Consider whether dirt, slime or foreign objects may be present in the circulating fluid inside the tank, and carry out regular cleanings of the tank.
2. When using ethylene glycol aqueous solution
   Use a concentration meter to confirm that the concentration does not exceed 40 %.
   Dilute or add as needed to adjust the concentration.

**<Periodical inspection during the winter season>**

**1. Make water-removal arrangements beforehand.**

If there is a risk of the circulating fluid and facility water freezing when the product is stopped, release the circulating fluid and facility water in advance. When the chiller needs to be switched off, please make sure that circulating fluid is discharged completely from both chiller and application. Please charge it at room temperature when the chiller needs to be switched on.

**2. Consult a professional.**

This product has an "anti-freezing function", "warming-up function", and "anti-snow coverage function". Read the Operation Manual carefully, and if any additional anti-freezing function (e.g. tape heater) is needed, ask for it from the vendor.

# Series HRSH
# Specific Product Precautions 6

**Be sure to read this before handling. Refer to back cover for Safety Instructions. For Temperature Control Equipment Precautions, refer to "Handling Precautions for SMC Products" and the Operation Manual on SMC website, http://www.smc.eu**

## Operation Restart Time/Operation and Suspension Frequency

### ⚠ Caution

1. **Wait five minutes or more before restarting operation after it has been stopped. If the operation is restarted within five minutes, the protection circuit may activate and the operation may not start properly.**
2. **Operation and suspension frequency should not exceed 10 times per day. Frequently switching between operation and suspension may result in the malfunction of the refrigeration circuit.**

## Protection Circuit

### ⚠ Caution

**If operating in the below conditions, the protection circuit will activate and an operation may not be performed or will stop.**

- Power supply voltage is not within the rated voltage range of ±10 %.
- In case the water level inside the tank is reduced abnormally.
- Circulating fluid temperature is too high.
- Compared to the cooling capacity, the heat generation amount of the user's equipment is too high.
- Ambient temperature is over 45 °C.
- Ventilation hole is clogged with dust or dirt.

## Maintenance

### ⚠ Caution

**<Periodical inspection every one month>**

**Clean the ventilation hole.**

If the dustproof filter of water-cooled type product becomes clogged with dust or debris, a decline in cooling performance can result.
In order to avoid deforming or damaging the dustproof filter, clean it with a long-haired brush or air gun.

**<Periodical inspection every three months>**

**Inspect the circulating fluid.**

1. When using tap water or deionized water
   - Replacement of circulating fluid
     Failure to replace the circulating fluid can lead to the development of bacteria or algae. Replace it regularly depending on your usage conditions.
2. When using ethylene glycol aqueous solution
   Use a concentration meter to confirm that the concentration does not exceed 15 %.
   Dilute or add as needed to adjust the concentration.

**<Periodical inspection during the winter season>**

1. **Make water-removal arrangements beforehand.**
   If there is a risk of the circulating fluid and facility water freezing when the product is stopped, release the circulating fluid and facility water in advance.
2. **Consult a professional.**
   This product has an "anti-freezing function", "warming-up function", and "anti-snow coverage function." Read the operation manual carefully, and if any additional anti-freezing function (e.g. tape heater) is needed, ask for it from the vendor.

## Maintenance

### ⚠ Caution

**<Periodical inspection during the summer season>**

**Check the value of the refrigerant circuit pressure on the high pressure side.**

If heat from the product cannot be sufficiently radiated due to a rise in the ambient temperature, a lack of ventilation, high elevation, etc., the refrigerant circuit pressure on the high pressure side will rise. As a result, the compressor will overload, affecting product performance and life.
Refer to the operation manual for details on how to check the value of the refrigerant circuit pressure on the high pressure side.

### ■ Refrigerant with GWP Reference

| Refrigerant | Global Warming Potential (GWP) | | | |
|---|---|---|---|---|
| | | | Fluorocarbon Emissions Control Act (Japan) | |
| | Regulation (EU) 2024/573 | AIM Act 40 CFR Part 84 | GWP value labeled on products | GWP value to be used for reporting the calculated amount of leakage |
| R134a | 1,430 | | 1,430 | 1,300 |
| R404A | 3,922 | | 3,920 | 3,940 |
| R407C | 1,774 | | 1,770 | 1,620 |
| R410A | 2,088 | | 2,090 | 1,920 |
| R448A | 1,386 | | 1,390 | 1,270 |
| R454C | 146 | | 145 | 146 |
| R32 | 675 | | 675 | 677 |
| R1234yf | 0.501 | 1 | — | — |

* This product is hermetically sealed and contains fluorinated greenhouse gases (HFC/HFO). When this product is sold on the market in the EU after January 1, 2017, it needs to be compliant with the quota system of the F-Gas Regulation in the EU.
* See specification table for refrigerant used in the product.

## ⚠ Safety Instructions

These safety instructions are intended to prevent hazardous situations and/or equipment damage. These instructions indicate the level of potential hazard with the labels of **"Caution," "Warning"** or **"Danger."** They are all important notes for safety and must be followed in addition to International Standards (ISO/IEC) [1], and other safety regulations.

| | |
|---|---|
| ⚠ **Danger:** | **Danger** indicates a hazard with a high level of risk which, if not avoided, will result in death or serious injury. |
| ⚠ **Warning:** | **Warning** indicates a hazard with a medium level of risk which, if not avoided, could result in death or serious injury. |
| ⚠ **Caution:** | **Caution** indicates a hazard with a low level of risk which, if not avoided, could result in minor or moderate injury. |

1) ISO 4414: Pneumatic fluid power – General rules and safety requirements for systems and their components.
ISO 4413: Hydraulic fluid power – General rules and safety requirements for systems and their components.
IEC 60204-1: Safety of machinery – Electrical equipment of machines. (Part 1: General requirements)
ISO 10218-1: Robots and robotic devices - Safety requirements for industrial robots - Part 1: Robots.
etc.

## ⚠ Warning

1. **The compatibility of the product is the responsibility of the person who designs the equipment or decides its specifications.**
   Since the product specified here is used under various operating conditions, its compatibility with specific equipment must be decided by the person who designs the equipment or decides its specifications based on necessary analysis and test results. The expected performance and safety assurance of the equipment will be the responsibility of the person who has determined its compatibility with the product. This person should also continuously review all specifications of the product referring to its latest catalogue information, with a view to giving due consideration to any possibility of equipment failure when configuring the equipment.

2. **Only personnel with appropriate training should operate machinery and equipment.**
   The product specified here may become unsafe if handled incorrectly. The assembly, operation and maintenance of machines or equipment including our products must be performed by an operator who is appropriately trained and experienced.

3. **Do not service or attempt to remove product and machinery/ equipment until safety is confirmed.**
   1. The inspection and maintenance of machinery/equipment should only be performed after measures to prevent falling or runaway of the driven objects have been confirmed.
   2. When the product is to be removed, confirm that the safety measures as mentioned above are implemented and the power from any appropriate source is cut, and read and understand the specific product precautions of all relevant products carefully.
   3. Before machinery/equipment is restarted, take measures to prevent unexpected operation and malfunction.

4. **Our products cannot be used beyond their specifications.**
   **Our products are not developed, designed, and manufactured to be used under the following conditions or environments.**
   **Use under such conditions or environments is not covered.**
   1. Conditions and environments outside of the given specifications, or use outdoors or in a place exposed to direct sunlight.
   2. Use for nuclear power, railways, aviation, space equipment, ships, vehicles, military application, equipment affecting human life, body, and property, fuel equipment, entertainment equipment, emergency shut-off circuits, press clutches, brake circuits, safety equipment, etc., and use for applications that do not conform to standard specifications such as catalogues and operation manuals.
   3. Use for interlock circuits, except for use with double interlock such as installing a mechanical protection function in case of failure. Please periodically inspect the product to confirm that the product is operating properly.

## ⚠ Caution

**We develop, design, and manufacture our products to be used for automatic control equipment, and provide them for peaceful use in manufacturing industries.**
**Use in non-manufacturing industries is not covered.**
Products we manufacture and sell cannot be used for the purpose of transactions or certification specified in the Measurement Act.
The new Measurement Act prohibits use of any unit other than SI units in Japan.

# Limited warranty and Disclaimer/Compliance Requirements

The product used is subject to the following "Limited warranty and Disclaimer" and "Compliance Requirements".Read and accept them before using the product.

## Limited warranty and Disclaimer

1. The warranty period of the product is 1 year in service or 1.5 years after the product is delivered, whichever is first. [2] Also, the product may have specified durability, running distance or replacement parts. Please consult your nearest sales branch.
2. For any failure or damage reported within the warranty period which is clearly our responsibility, a replacement product or necessary parts will be provided. This limited warranty applies only to our product independently, and not to any other damage incurred due to the failure of the product.
3. Prior to using SMC products, please read and understand the warranty terms and disclaimers noted in the specified catalogue for the particular products.

2) Vacuum pads are excluded from this 1 year warranty.
A vacuum pad is a consumable part, so it is warranted for a year after it is delivered. Also, even within the warranty period, the wear of a product due to the use of the vacuum pad or failure due to the deterioration of rubber material are not covered by the limited warranty.

## Compliance Requirements

1. The use of SMC products with production equipment for the manufacture of weapons of mass destruction (WMD) or any other weapon is strictly prohibited.
2. The exports of SMC products or technology from one country to another are governed by the relevant security laws and regulations of the countries involved in the transaction. Prior to the shipment of a SMC product to another country, assure that all local rules governing that export are known and followed.

## Revision History

| | | |
|---|---|---|
| **Edition B** | - Xxxxxxxxxx | QS |
| **Edition C** | - Xxxxxxxxxx<br>- Xxxxxxxxxxx | XU |

## SMC Corporation (Europe)

| | | | |
|---|---|---|---|
| **Austria** | +43 (0)2262622800 | www.smc.at | office.at@smc.com |
| **Belgium** | +32 (0)33551464 | www.smc.be | info@smc.be |
| **Bulgaria** | +359 (0)2807670 | www.smc.bg | sales.bg@smc.com |
| **Croatia** | +385 (0)13707288 | www.smc.hr | sales.hr@smc.com |
| **Czech Republic** | +420 541424611 | www.smc.cz | office.at@smc.com |
| **Denmark** | +45 70252900 | www.smcdk.com | smc.dk@smc.com |
| **Estonia** | +372 651 0370 | www.smcee.ee | info.ee@smc.com |
| **Finland** | +358 207513513 | www.smc.fi | smc.fi@smc.com |
| **France** | +33 (0)164761000 | www.smc-france.fr | smc.fi@smc.com |
| **Germany** | +49 (0)61034020 | www.smc.de | info.de@smc.com |
| **Greece** | +30 210 2717265 | www.smchellas.gr | sales@smchellas.gr |
| **Hungary** | +36 23513000 | www.smc.hu | office.hu@smc.com |
| **Ireland** | +353 (0)14039000 | www.smcautomation.ie | technical.ie@smc.com |
| **Italy** | +39 03990691 | www.smcitalia.it | mailbox.it@smc.com |
| **Latvia** | +371 67817700 | www.smc.lv | info.lv@smc.com |
| **Lithuania** | +370 5 2308118 | www.smclt.lt | info.lt@smc.com |
| **Netherlands** | +31 (0)205318888 | www.smc.nl | info@smc.nl |
| **Norway** | +47 67129020 | www.smc-norge.no | post.no@smc.com |
| **Poland** | +48 222119600 | www.smc.pl | technical.ie@smc.com |
| **Portugal** | +351 214724500 | www.smc.eu | apoiocliente.pt@smc.com |
| **Romania** | +40 213205111 | www.smcromania.ro | office.ro@smc.com |
| **Russia** | +7 (812)3036600 | www.smc.eu | sales@smcru.com |
| **Slovakia** | +421 (0)413213212 | www.smc.sk | sales.sk@smc.com |
| **Slovenia** | +386 (0)73885412 | www.smc.si | office.si@smc.com |
| **Spain** | +34 945184100 | www.smc.eu | post.es@smc.com |
| **Sweden** | +46 (0)86031240 | www.smc.nu | order.se@smc.com |
| **Switzerland** | +41 (0)523963131 | www.smc.ch | helpcenter.ch@smc.com |
| **Turkey** | +90 212 489 0 440 | www.smcturkey.com.tr | satis@smcturkey.com.tr |
| **UK** | +44 (0)845 121 5122 | www.smc.uk | sales.gb@smc.com |
| **South Africa** | +27 10 900 1233 | www.smcza.co.za | Sales.za@smc.com |

Printing CZ 00 Printed in Spain

Specifications are subject to change without prior notice and any obligation on the part of the manufacturer